CITY OF MARTINSVILLE, INDIANA

STORMWATER MANAGEMENT & EROSION CONTROL ORDINANCE AND STORMWATER DESIGN MANUAL

JUNE 2004

ORDINANCE 2004-1522

THE CITY OF MARTINSVILLE STORMWATER MANAGEMENT AND EROSION CONTROL ORDINANCE

WHEREAS, the Common Council of the City of Martinsville, Indiana, ("City Council") is the legislative body of Martinsville, Indiana;

WHEREAS, it is necessary to establish stormwater management requirements and controls in Martinsville to protect and safeguard the general health, safety, and welfare of the public, and so that Martinsville may comply with all requirements of 327 IAC 15-13;

WHEREAS, the City Council have the authority to adopt a stormwater management ordinance pursuant to I.C. 36-1-3; and,

WHEREAS, the City Council having considered the proposed Martinsville Stormwater Management Ordinance and heard public comment, deem it appropriate that the Martinsville Stormwater Management Ordinance be adopted.

BE IT THEREFORE ORDAINED by the City Council of Martinsville Indiana, as follows:

1. The Martinsville Stormwater Management Ordinance is hereby adopted.

2. The Martinsville Stormwater Management Ordinance shall be effective upon publication, as required under I.C. 36-2-4-8.

3. The Martinsville Stormwater Management and Erosion Control Ordinance shall be printed separate or together with the Martinsville Stormwater Management and Erosion Control Design Manual and two (2) copies filed with the Martinsville Clerk Treasurer, two (2) copies with the Office of City Superintendent and such additional

copies shall be maintained for sale to the public by the Martinsville Clerk Treasurer or such other agency deemed appropriate.

4. The Martinsville Board of Public Works and Safety (BPWS) is authorized to adopt and publish, revise and update as needed, a stormwater and erosion control design manual (Martinsville Stormwater and Erosion Control Design Manual (SWECDM)) to implement the requirements of this ordinance which will include additional policy, information, specifications, standards, construction details and other information or requirements the BPWS deems necessary for implementation of this ordinance.

5. This Ordinance replaces City Ordinance 97-1392, Erosion Control and City Ordinance 97-1410, Drainage. Now therefore Ordinance 97-1392 and Ordinance 97-1410 are repealed as of the effective date of this ordinance.

So Passed and Ordained this 21st day of June, 2004.

MARTINSVILLE CITY COUNCIL

_____
Shannon L. Buskirk, Mayor

ATTEST:

_____
Mary Lou Peden
Martinsville Clerk Treasurer

_____
Douglas Arthur

_____
David Barger

_____
Gordon Burgin

_____
Sheldon Buskirk

_____
Phillip R. Deckard, II

_____
Gary Lester

_____
Scott D. Manley

Introduction

1.1 Findings

1.1.1 Water bodies, roadways, structures, and other property within, and downstream of Martinsville are at times subjected to flooding;

1.1.2 Flooding is a danger to the lives and property of the public and is also a danger to the natural resources of Martinsville and the region;

1.1.3 Land development alters the hydrologic response of watersheds, resulting in increased stormwater runoff rates and volumes, flooding, stream channel erosion, and sediment transport and deposition;

1.1.4 Stormwater runoff produced by land development contributes to increased quantities of water-borne pollutants;

1.1.5 Stormwater runoff, soil erosion, and non-point source pollution, due to land development within Martinsville, have resulted in the deterioration of the water resources of Martinsville and downstream municipalities. Increased stormwater runoff rates and volumes, and the sediments and pollutants associated with stormwater runoff from development projects within Martinsville may, absent reasonable regulation and control, adversely affect Martinsville's water bodies and water resources, and those of downstream municipalities.

1.1.6 Stormwater runoff, soil erosion, and non-point source pollution can be controlled and/or minimized by the regulation and management of stormwater runoff from development;

1.1.7 Adopting the standards, criteria and procedures contained in this Ordinance and implementing the same will address many of the detrimental effects of stormwater runoff; and,

1.1.8 Adopting these standards is necessary for the preservation of the soils and topography of Martinsville as well as the public health, safety and welfare.

1.1.9 Martinsville has the authority to adopt a Stormwater Management Ordinance pursuant to I.C. 36-1-3 and so that Martinsville may comply with all requirements of 327 IAC 15-13.

1.2 Purpose

It is the purpose of this Ordinance to establish minimum stormwater management requirements and controls to protect and safeguard the general health, safety, and welfare of the public. This Ordinance seeks to accomplish, among others, the following objectives:

1.2.1 To reduce flood damage;

1.2.2 To mitigate increased stormwater runoff rates and volumes from identified new land development;

1.2.3 To minimize the deterioration of existing watercourses, culverts and bridges, and other structures associated with stormwater conveyance;

1.2.4 To encourage water recharge into the ground where geologically favorable conditions exist;

1.2.5 To prevent an increase in non-point source pollution;

1.2.6 To maintain the integrity of stream channels for biological functions, as well as for drainage and other purposes;

1.2.7 To minimize the impact of development upon stream bank and stream bed stability;

1.2.8 To reduce erosion and off-site sedimentation from development or construction projects;

1.2.9 To preserve and protect water supply facilities and water resources by means of controlling increased flood discharges, stream erosion, and runoff pollution;

1.2.10 To reduce stormwater runoff rates and volumes, soil erosion, and non-point source pollution, wherever practicable, from lands that were developed without stormwater management controls meeting the purposes and standards of this Ordinance as well as future developments; and,

1.2.11 To implement the minimum standards established in this Ordinance to protect water bodies from degradation resulting from changing land use where there are insufficient stormwater management controls.

1.2.12 To protect adjoining property owners from detrimental impacts caused by changing land use and/or drainage.

1.2.13 To ensure that mineral extraction is carried out without adverse impact on water bodies or nearby landowners.

1.2.14 To comply with the standards set forth in 327 IAC 15-13.

1.3 Applicability, Exemptions and General Provisions

This Ordinance shall apply to any development within the incorporated boundaries of Martinsville which will alter stormwater drainage characteristics of the disturbed land or development site, provided, however, that this Ordinance shall not apply to the following:

1.3.1 The installation or removal of individual mobile homes within a mobile home park. This exemption shall not be construed to apply to the construction, expansion, or modification of a mobile home park;

1.3.2 Subdivision plats with primary (preliminary) plat approval, planned unit developments (PUD) that have received final detailed plan approval and individual lots or parcels for which an improvement location permit has been issued, prior to the effective date of this Ordinance, where such approval and permit remain in effect;

1.3.3 Improvements, including building additions, parking lots, storage lots and other impervious areas, to existing developed lots or parcels where the total increase in impervious area is less than 0.25 acres (10,890 square feet), except the Office of City Engineer (OCE) may allow areas up to 0.5 acres (21,780 square feet) where applicant has demonstrated, through engineering data and calculations as required by the Martinsville SWECDM, that the existing stormwater pipes, swales, ditches or other conveyance structures can accept the additional runoff, for the 100, 10 and 2-year return periods and storm durations required by the Martinsville SWECDM, without exceeding one (1) percent of the existing conveyance structures 2-year storm flow capacity at the point of where the discharge enters the conveyance structure from the site;

1.3.4 Minor residential subdivisions (defined as a subdivision of not more than four (4) lots for the construction of single and two-family homes) where the total area of the minor plat is less than one acre. Also, single and two-family homes on existing lots or parcels where not more than 0.5 acres (21,780 square feet) will be disturbed;

1.3.5 Areas outside the corporate limits of the City of Martinsville. In those areas the Morgan County Drainage Board is responsible for

Stormwater Management Plan Approval (SWMPA). As a condition for approval of any project or development outside the corporate limits but within the planning and zoning area of the City of Martinsville (Buffer Zone) a permit from the Morgan County Drainage Board showing a SWMPA has been approved must be submitted to the City prior to final plat or plan approval.

1.4 Variances

A variance from any or all requirements of this Ordinance may be granted by the specific approval of the OCE. No variance shall be approved that would ultimately result in failure by the OCE to meet the requirements of any Federal or State law. Variance requests that are denied will list how it diminishes the protective standards from human health or the environment set forth by the Ordinance. A denied variance may be appealed to the Martinsville Board of Public Works and Safety (BPWS) within thirty (30) days of receipt of the denial. Requests for variance from the requirements of this Ordinance must be in written form, addressed to the OCE and demonstrate the following:

1.4.1 Specify the provision(s) of this Ordinance and/or the provision(s) of the Martinsville SWECDM from which the variance is requested,

1.4.2 Clearly state the reason for the variance request and why the conditions of this Ordinance cannot be met,

1.4.3 Describe how the requested variance does not diminish the protective standards for human health or the environment set forth by the Ordinance.

1.5 Compatibility with Other Permit and Ordinance Requirements

This Ordinance is not intended to interfere with or annul any other ordinance, rule or regulation, statute, or other provision of law. The requirements of this Ordinance should be considered minimum requirements, and where any provision of this Ordinance imposes restrictions different from those imposed by any other ordinance, rule or regulation, or other provision of law, whichever provisions are more restrictive or impose higher protective standards for human health or the environment shall be considered to take precedence.

1.6 Severability

If the provisions of any article, section, subsection, paragraph, subdivision or clause of this Ordinance shall be judged invalid by a court of competent jurisdiction, such order of judgment shall not affect or invalidate the remainder of any article, section, subsection, and paragraph.

1.7 Fees and Penalties

The fee schedule for permit, reviews, and inspections shall be as given in Appendix “A”, Table 1 of this ordinance. Penalties for violation of this ordinance shall be imposed per Appendix “A”, Table 2 of this ordinance. A printing fee shall be charged to cover the costs of labor, materials, and equipment used in printing of this Ordinance and the Martinsville SWECDM said fee may be adjusted from time to time based on the cost of printing.

1.8 Development of a Stormwater Erosion Control Design Manual (SWECDM)

The BPWS has furnished additional policy, criteria, and information including specifications and standards, for the proper implementation of the requirements of this Ordinance in the form of a Martinsville SWECDM.

This manual includes details of acceptable stormwater management and treatment practices, including specific design criteria for each stormwater practice. The manual may be updated and expanded as necessary and needed from time to time by the OCE, subject to approval by the BPWS, based on improvements in engineering, science, monitoring and local maintenance experience. Stormwater treatment practices that are designed and constructed in accordance with the design and sizing criteria will be presumed to meet the minimum water quality and quantity performance standards.

2.0 Definitions

(1) Base Flood – A flood having a one (1) percent probability of being equaled or exceeded in any given year (also referred to as the 100-year flood).

(2) Base Flood Elevation (BFE) – The height of the Base Flood in relation to the National Geodetic Vertical Datum (NGVD) of 1929; commonly referred to as the "100-year flood elevation".

(3) Base Flood Plain – The area inundated by the Base Flood.

(4) Best Management Practice or “BMP” - Any structural or nonstructural control measure utilized to improve the quality and, as appropriate, reduce the storm water run-off rate. The term includes schedules of activities, prohibitions of practice, treatment requirements, operation and maintenance procedures, use of containment facilities, land use planning, policy techniques, and other practices that comply with Martinsville’s SWECDM.

(5) BPWS – The Martinsville Board of Public Works and Safety

(6) Building – An enclosed structure constructed or erected partially or wholly above ground. The term "building" includes both the above-ground and the below-ground portions of the structure.

(7) Building Opening – Any opening of a solid wall such as a window or door, through which floodwaters could penetrate.

(8) Certified Survey for Mineral Extraction - A certified survey demonstrating the number and proximity of residences located within the closest and most densely populated quarter mile adjacent to the proposed mineral extraction site.

(9) Certify – A statement that a proposed development meets the requirements of the Martinsville Stormwater Management Ordinance.

(10) Channel – A conveyance intended to carry runoff such as a swale or ditch.

(11) Clean Water Act – The Federal Water Pollution Control Act, 33 USC Sec 1251 et seq., as amended, and the applicable regulations promulgated thereunder.

(12) CLOMR – A conditional Letter of Map Revision. A letter that indicates that FEMA will revise base flood elevations, flood insurance rate zones, flood boundaries, or floodways as shown on an effective FIRM or FBFM, after the as-built or record drawings confirming the proposed conditions are submitted and approved.

(13) CLOMR-F – A Conditional Letter of Map Revision Based on Fill. A letter that indicates that FEMA will revise the base flood boundaries as shown on an effective FIRM. This letter does not apply to map revisions involving BFE or floodway delineation changes.

(14) Construction Site Stormwater Runoff – Stormwater runoff from a development site following a land alteration.

(15) Conveyance – Any pipe, swale, ditch, etc. intended to carry stormwater from one point to another.

(16) Culvert – A closed conduit such as a pipe designed for the conveyance of surface drainage water under a roadway, railroad, embankment or other impediment. (See also Pipe System)

(17) Detention – A system which is designed to capture stormwater, store it and release it over a given period of time through an outlet structure at a controlled rate.

(18) Detention Facility – A manmade structure for the temporary storage of stormwater runoff with a controlled release during or immediately following a storm.

(19) Developed or Development – A land alteration that requires, pursuant to state law or local ordinance, the approval of a site plan, plat, special land use, planned unit development, rezoning of land, land division approval, private road approval or other approvals required for the construction of land or the erection of buildings or structures; provided, however, that for purposes of this Ordinance only, developed or development shall not include the actual construction of, or an addition, extension or modification to, an individual single-family or a two-family detached dwelling.

(20) Developer – Any person proposing or implementing the development of land.

(21) Development Site – Any land that is being or has been developed, or that a developer proposes for development.

(22) Discharger – Any person who directly or indirectly discharges stormwater from any property. Discharger also means any employee, officer, director, partner, contractor, or other person who participates in, or is legally or factually responsible for, any act or omission that is or results in a violation of this Ordinance.

(23) Ditch – An earthen conveyance with side slopes steeper than 5:1 or carrying greater than 10 cubic feet per second,

(24) Drain – A buried slotted or perforated pipe or other conduit (subsurface drain) or a ditch (open drain) for carrying off surplus groundwater or surface water.

(25) Drainage – The collection, conveyance, or discharge of ground water and/or surface water.

(26) Drainage Facilities – All ditches, channels, conduits, retention-detention systems, tiles, swales, sewers, and other natural or artificial means of draining stormwater from land.

(27) Drainageway – The area within which surface water or ground water is carried from one part of a lot or parcel to another part of the lot or parcel or to adjacent land.

(28) Easement - An authorization grant by a property owner for the use by another of any designated part of his property for a clearly specified purpose including but not limited to common pedestrian ways and hiking and biking paths.

(29) Engineer – A person licensed to practice engineering in the State of Indiana.

(30) EPA – The United States Environmental Protection Agency.

(31) Erosion – The process by which the ground surface is worn away by action of wind, water, gravity or a combination thereof.

(32) Erosion and Sediment Control Plan – A plan that is designed to minimize the accelerated erosion and sediment runoff at a site during construction activities.

(33) Farm Operation – Means any of the following activities involved in carrying on a farm business:

(a) growing, producing, raising or keeping animals or plants, including mushrooms, or the primary products of those plants or animals;

(b) clearing, draining, irrigating or cultivating land;

(c) using farm machinery, equipment, devices, materials and structures;

(d) applying fertilizers, manure, pesticides and biological control agents, including by ground and aerial spraying;

(e) conducting and other activity on, in or over agricultural land required to reasonably carry on a agricultural farming operation;

(f) intensively cultivating in plantations, any

(i) specialty wood crops, or

(ii) specialty fiber crops

(g) conducting turf production

(h) processing or direct marketing the products of a farm owned or operated by the farmer, as well as products not of that farm to the extent that the processing or marketing of those products is conducted on the farmer's farm;

(34) FBFM – A Flood Boundary and Floodway Map. A floodplain management map issued by FEMA that depicts, based on detailed engineering analyses, the boundaries of the base or 100-year flood, the 500-year flood, and the floodway.

(35) Federal Emergency Management Agency (FEMA) – The agency of the federal government charged with emergency management.

(36) FIRM – A Flood Insurance Rate Map. A map issued by FEMA that is an official community map, on which FEMA has delineated both the special flood hazard areas and the insurance risk premium zones applicable to the community. This map may or may not include floodways.

(37) Flood or Flooding – A general and temporary condition of partial or complete inundation of normally dry land areas resulting from the overflow of water bodies or the unusual and rapid accumulation of surface water runoff from any source.

(38) Floodplain – Any land area subject to periodic flooding.

(39) Flood-Proofing – Any structural and/or non-structural additions, changes, or adjustments to structures or property that reduce or eliminate flood damage to land, or improvements utilities and structures.

(40) Flood Protection Elevation (FPE) or Flood Protection Grade (FPG) – The Base Flood Elevation plus two (2) foot at any given location.

(41) Floodway – The channel of any watercourse and the adjacent land areas that must be reserved to carry and discharge a base flood without cumulatively increasing the water surface elevation more than one-tenth (1/10) of a foot due to the loss of flood conveyance or storage.

(42) Grading – Any stripping, excavating, filling, and stockpiling of soil or any combination thereof and the land in its excavated or filled condition.

(43) Gutter Spread – The spread of water on a roadway surface perpendicular from the face of the gutter into the driving lane.

(44) IDEM – The Indiana Department of Environmental Management.

(45) Illicit Connection – Any method or means for conveying an illicit discharge into water bodies or Martinsville's stormwater conveyance system.

(46) Illicit Discharge – Any discharge to water bodies that do not consist entirely of stormwater discharges, pursuant to the terms of an NPDES permit. The following non-stormwater discharges are allowable discharges and are exempt from requirements of this ordinance.

(a) Water line flushing with diffusion device.
(b) Landscape irrigation.
(c) Diverted stream flows.
(d) Rising ground waters.
(e) Uncontaminated ground water infiltration.
(f) Uncontaminated pumped ground water.
(g) Discharges from potable water sources.
(h) Foundation drains.
(i) Air conditioning condensation.
(j) Irrigation water.

(k) Springs.
(l) Water from crawl spaces pumps.
(m) Footing drains.
(n) Lawn watering.
(o) Individual residential car washing and non-profit carwash fund raising events.
(p) Flows from riparian habitats and wetlands.
(q) Dechlorinated swimming pool discharges.
(r) Street washing/cleaning water.
(s) Discharges from firefighting activities.

(47) Impervious Surface – Surface that does not allow stormwater runoff to percolate into the ground such as asphalt, concrete, roofs, gravel and crushed stone.

(48) Land Alteration – Any action taken relative to land which either:

(a) Removes the natural ground cover;

(b) Changes the contour; or

(c) Increases the runoff rate; or

(d) Changes the elevation; or

(e) Decreases the rate at which water is absorbed; or

(f) Changes the drainage pattern; or

(g) Creates or changes a drainage facility; or

(h) Involves construction, enlargement or location of any building on a permanent foundation; or

(i) Creates an impoundment.

Land alteration includes (by way of example and not of limitation) terracing, grading, excavating, constructing earthwork, draining, installing drainage tile, filling and paving.

(49) Land Surveyor – A person licensed to practice land surveying in the State of Indiana.

(50) LOMA – A Letter of Map Amendment. The official determination by FEMA that a specific structure or lot is not within a regulatory floodplain due to naturally occurring high ground (i.e. without fill). A LOMA amends the effective FIRM.

(51) LOMR – A Letter of Map Revision. A letter from FEMA that revises base flood elevations, flood insurance rate zones, flood boundaries, or floodways as shown on an effective FBFM or FIRM.

(52) LOMR-F – A Letter of Map Revision Based on Fill. A letter that provides formal recognition by FEMA that either a parcel of property or a structure has been removed from the base or 100-year floodplain due to elevation based on the placement of fill. This letter does not apply to map revisions involving BFE or floodway delineation changes.

(53) Lowest Floor – The lowest floor or the lowest enclosed area (including a basement), but not including an unfinished or flood-proof enclosure that is usable solely for parking of vehicles or building access.

(54) Maintenance – Cleaning, removing obstructions from, and making minor repairs to a drainage facility so that it will perform the function for which it was designed and constructed.

(55) Manufactured BMP – A structural BMP designed for stormwater quality treatment constructed of a combination of manmade materials at an off-site facility.

(56) Mineral Extraction – The removal of oil, gas, coal, ore, gravel, sand, aggregate or other resources from below the surface of the land.

(57) MS4 – Municipal Separate Storm Sewer System as defined by 327 IAC 15-13-5 section 5 (43).

(58) NFIP – The National Flood Insurance Program. The requirements of the NFIP are codified in Title 44 of the Code of Federal Regulations.

(59) Non-point Source Pollution – Pollution from any source other than from any discernible, confined, and discrete conveyances, and shall include, but not be limited to, pollutants from agricultural, silvicultural, mining, construction, subsurface disposal, dumping, and urban runoff sources.

(60) Non-Stormwater Discharge – Any discharge to the storm drain system that is not composed entirely of stormwater.

(61) Non-structural BMP – A BMP that is not constructed by physical means of land disturbance such as education, public information handouts etc.

(62) NPDES – National Pollution Discharge Elimination System.

(63) Overland flow-way – Surface area that conveys a concentrated flow of stormwater runoff.

(64) OCE – Office of Martinsville City Engineer.

(65) Peak Storm – The storm of a specified return period that produces the maximum runoff from a site or the maximum elevation in a detention pond. Storm durations of 0.5, 1, 2, 3, 6, 12 and 24-hours shall be used to determine the peak storm.

(66) Perimeter Drain – A subsurface pipe network designed and installed around the perimeter of a septic field for the purpose of effectively collecting and draining away excess subsurface waters.

(67) Person – An individual, firm, partnership, association, public or Private Corporation, public agency, instrumentality, or any other legal entity.

(68) Pipe System – Two or more pipes connected together by one or more structures such as a manhole designed to convey stormwater runoff.

(69) Plan – Written narratives, specifications, drawings, sketches, written standards, operating procedures, or any combination of these, which contain information pursuant to this Ordinance.

(70) Pollutant – A substance which causes or contributes to pollution which includes, but is not limited to the following: any dredged spoil, solid waste, vehicle fluids, yard wastes, animal wastes, agricultural waste products, sediment, incinerator residue, sewage, garbage, sewage sludge, munitions, chemical wastes, biological wastes, radioactive materials, heat, wrecked or discharged equipment, rock, sand, cellar dirt, and industrial, municipal, commercial and agricultural waste, or any other contaminant or other substance defined as a pollutant under the Clean Water Act.

(71) Pollution – The human-made or human-induced alteration of the quality of waters by waste to a degree which unreasonably affects, or has the potential to unreasonably affect, either the waters for beneficial uses or the facilities which serve these beneficial uses.

(72) Property Owner – Any person having legal or equitable title to property, having a contractual interest in property, or any person having or exercising care, custody, or control over any property.

(73) Reclamation Plan for Mineral Extraction – A document illustrating drainage patterns, both existing and proposed, at a mineral extraction site; proposed erosion control and off-site sedimentation control of the site; and proposed final land use and post construction stormwater quality BMPs for the site, all of which are documented at the initial approval of the SWMP and at 10-year intervals following the approval of a SWMP.

(74) Record Drawings – Drawings prepared, signed, and sealed by a professional engineer or land surveyor representing the final "as-built" record of the actual in-place elevations, location of structures, and topography.

(75) Registered Professional – An engineer, land surveyor or architect license under the laws of the State of Indiana to practice the respective profession.

(76) Regulated Drain – A drain, either open channel or closed tile/sewer, subject to the provisions of the Indiana Drainage Code, I.C.-36-9-27.

(77) Retention – A system that is designed to capture stormwater and contain it until it infiltrates into the soil or evaporates but may have control structure for release of the 100-year flood.

(78) Right-of-way - A strip of land occupied or intended to be occupied by a street, pedestrian-way, hiking path, biking path, crosswalk, railroad, electric transmission line, oil or gas pipeline, water main, sanitary or storm sewer main, special landscaping, drainage, or for another special use. The usage of the term "right-of-way" for land platting purposes shall mean that every right-of-way hereafter established and shown on a final plat is to be separate and distinct from the lots or parcels adjoining such right-of-way and not included within the dimensions or areas of such lots or parcels. Rights-of-way intended for streets, crosswalks, water mains, sanitary sewers, storm drains, screening, or special landscaping, or any other use involving maintenance by the City Council shall be dedicated to public use by the subdivider on whose plat such right-of-way is established. All divisions of land along existing roadways shall dedicate half right of way for public purposes along it's entire frontage in the amount as specified for the classification of the existing roadway.

(79) Roadway drainage – The runoff and drainage located within 20 feet of the edge of pavement of public and/or private roadways adjacent to, abutting, or within the boundaries of the property to be addressed in a proposed Stormwater Management submittal.

(80) Runoff – The waters derived from melting snow or rain falling within a tributary drainage basin that exceeds the infiltration capacity of the soils of that basin.

(81) Soil Erosion – The stripping of soil and weathered rock from land creating sediment for transportation by water, wind, or ice, and enabling formation of new sedimentary deposits.

(82) Storm Drain – A system of open or enclosed conduits and appurtenant structures intended to convey or manage stormwater runoff, groundwater, and drainage.

(83) Storm Drain System – Publicly owned facilities operated by the City or easements on private property by which storm water is collected and/or conveyed, including but not limited to any roads with drainage systems, streets, gutters, curbs, inlets, piped storm drains, pumping facilities, retention and detention basins, natural and human-made or altered drainage channels, ditches, swales, reservoirs and other drainage structures which are within the City and are not part of a publicly owned treatment works as defined at 40 CFR Section 122.2

(84) Stormwater – Any surface flow, runoff, and drainage consisting entirely of water from rain storm events.

(85) Stormwater Management Plan (SWMP) - An engineered drainage plan that effectively addresses and manages stormwater runoff and discharge.

(86) Stormwater Management Plan Approval (SWMPA) – An approval issued pursuant to this Ordinance from the OCE that states all requirements of the Martinsville Stormwater Management Ordinance have been met.

(87) Stormwater Quality Management Plan – A comprehensive written document that addresses stormwater runoff quality within a municipal separate storm sewer system area.

(88) Stormwater Runoff – The runoff and drainage of precipitation resulting from rainfall or snowmelt or other natural event or process.

(89) Stormwater Runoff Facility – The method, structure, area, system, or other equipment or measures that are designed to receive, control, store, or convey stormwater.

(90) Stream – A river, stream or creek which may or may not be serving as a drain, or any other water body that has definite banks, a bed, and visible evidence of a continued flow or continued occurrence of water.

(91) Structural BMP – A structure designed and constructed for the purpose of stormwater quality treatment.

(92) Swale – A depressed earthen designed to convey stormwater runoff with side slopes 5:1 or shallower and conveying no more than 10 cfs.

(93) USACOE – The United States Army Corps of Engineers.

(94) USEPA – The United States Environmental Protection Agency.

(95) Water Body – A river, lake, stream, creek or other watercourse or wetlands.

(96) Water Quality Volume (WQv) – The storage needed to capture and treat the volume of rainfall for 90% of the storm events which produce runoff in the watershed annually.

(97) Watershed – A region draining into a water body.

(98) Wetlands – Land characterized by the presence of water at a frequency and duration sufficient to support wetland vegetation or aquatic life.

3.0 Submission Requirements and Plan Approvals

Any person or landowner who develops or engages in development activities on land or a development site subject to the provisions of this Ordinance must first obtain a Stormwater Management Plan Approval (SWMPA) from the OCE. A permit is obtained by first submitting a Stormwater Management Plan (SWMP) to the OCE, which shall include the following:

3.1 Complete set of plans including a title page with location and vicinity maps, existing and proposed condition plan sheets, construction details and erosion control plans all sealed by a registered professional. A plan and profile of the proposed drainage system shall be provided. Individual sheets shall be required for existing topography, proposed topography, erosion control, plan and profiles, and details and shall also contain the information required by Improvement Location Permit section of the City of Martinsville Zoning Ordinance. All sheets shall be 24 inches by 36 inches.

3.2 Mineral Extraction operations seeking a SWMPA shall submit the following additional materials with their proposed Stormwater Management Plan (SWMP): a certified survey showing the number and proximity of residents within the adjoining area (per 312 IAC 2-3-2); a copy of the approved driveway permit with all transportation and drainage easements and right-of-ways granted by the applicant along public ways and waterways; and a reclamation plan. Any changes in a plan approved by the OCE must be submitted to the OCE and re-approved as a revision. Additional hourly engineering review fees will be applicable to this revision review.

3.3 A drainage narrative describing the existing and proposed conditions and runoff patterns and complete documentation of all calculations and assumptions. This narrative shall be sealed by a registered professional.

3.4 All SWMP submittals must meet the requirements of this Ordinance and the provisions of the SWECDM. A written narrative is required with the submittal stating that the drainage plans are in compliance with the provisions of this Ordinance and the SWECDM.

The OCE may require such additional information to be included in a drainage plan that is necessary to evaluate and determine the adequacy of the proposed drainage and water quality facilities.

At such time as the OCE determines that all requirements of this Ordinance are met, a formal notice of approval (SWMPA) shall be issued by the OCE.

Any construction project holding a SWMPA, determined to be inconsistent with plans previously approved by the OCE may be subject to the articles of Section 12 of this Ordinance (Enforcement). Any changes in a set of SWMP approved by the OCE must be submitted to the OCE and re-approved as a revision. Additional hourly engineering review fees will be applicable to this revision review.

A SWMPA shall expire two (2) calendar years from the date of issuance. At expiration previously permitted development underway may continue construction activities under the terms of the original SWMPA. Previously approved development not underway at the time of expiration shall be required to obtain a new SWMPA per this Ordinance prior to the initiation of construction activities.

4.0 Detention and Landscaping requirements

Detention shall be required for all proposed developments where the runoff rate from the proposed post-developed conditions shall increase when compared to the pre-developed conditions. In addition, detention may be required for any development in areas where downstream flooding has been identified by the OCE. The pre- and post-developed runoff rates shall be determined using methodologies specified in the Martinsville SWECDM. Trees and grass have proven effective in reducing the amount of stormwater runoff therefore a minimum level of landscaping is required.

The following requirements shall be fulfilled for all detention facilities:

4.1 The runoff from the developed condition peak storm with a 100-year return period storm shall be limited to the runoff rate from the pre-developed condition peak storm with a 10-year return period storm.

4.2 The runoff from the developed condition peak storm with a 10-year return period storm shall be limited to the runoff rate from the pre-developed condition peak storm with a 2-year return period storm.

4.3 There shall be no increase in the runoff rate from the pre-developed conditions to the post-developed conditions for all storms at all discharge points along the property line.

4.4 An adequate downstream receiving facility shall be identified on the plans. There shall be no increase in erosion potential on the adjoining properties.

4.5 Earthen embankments, dams and/or berms designed and constructed to detain or impound stormwater shall be designed using criteria specified in the Martinsville SWECDM.

The following minimum landscaping requirements shall be fulfilled as a part of stormwater detention. Additional landscaping beyond this minimum is encouraged. See the City of Martinsville SWECDM, Appendix III for approved tree list.

4.6 A landscape strip of grass, trees and shrubs, not less than five (5) feet in width for lots up to 1.50 acres in area and ten (10) feet in width for lots 1.50 acres or larger in area shall be maintained between the property line and the nearest impervious surface (curb, parking lot, buildings, private sidewalk etc.) around the entire perimeter of the parcel except where access drives are located.

4.7 One deciduous shade (overstory) tree of 2.5 inch caliper shall be planted for each 20,000 square feet lot area and one deciduous ornamental (understory) tree of 1.5 inch caliper shall be planted for each 10,000 square foot of lot area. The STMP shall show the location of the proposed trees, their size, common name and species. Each lot shall have a minimum of one shade tree and two ornamental trees. Caliper of tree shall be measured at four feet above ground.

4.8 Existing, wooded & forested areas shall be shown on the plan required by Section 3 of this ordinance. Every effort shall be made to preserve existing wooded areas and to incorporate these areas as protected space on the development plan.

Conveyance Requirements

Conveyance structures (outfalls, pipes, swales ditches, culverts, etc.) shall be designed in accordance to the Martinsville SWECDM to fulfill the following requirements:

4.9 Outfalls - All proposed pipe outfalls shall have an adequate receiving facility identified on the plans. There shall be no increase in erosion and sedimentation on adjoining properties.

4.10 Pipe Systems – All pipe systems shall accommodate the 10-year storm event with the hydraulic gradeline in the crown of the pipe. In addition, an overflow route to the detention structure shall be provided for the flows resulting from storms with a return period greater than the 10-year. In situations where an overflow route to the detention structure cannot be created, the pipes shall be designed with the 100-year hydraulic gradeline runoff below the top of casting or provide an easement encompassing the 100-year inundated areas.

4.11 Inlets – Inlets shall be located to limit gutter spread during the 10-year storm event such that one lane (12-feet minimum), based on the roadway width, is open. Multi-lane roadways shall maintain one clear driving lane (12-feet minimum) in each direction. Inlets shall have the capacity to accommodate

the 10-year storm or the 100-year storm where overflow channels are not provided.

4.12 Culverts – Culverts under roadways designated as thoroughfares, arterials or that provides the only means of ingress and egress to developments shall accommodate the 100-year flow to the culvert without overtopping the roadway.

Culverts under collector roadways (those roadways connected to designated thoroughfares and arterials) shall accommodate the 50-year flow to the culvert without overtopping the roadway.

All other roadway culverts shall accommodate the 25-year flow to the culvert without overtopping the roadway.

Driveway culverts shall accommodate the 10-year flow to the culvert without overtopping the driveway.

4.13 Lift Stations – Lift stations shall not be designed as part of a stormwater conveyance system. Proposed stormwater lift stations will only be reviewed if complete documentation of no other reasonable option is provided. Stormwater lift stations will be approved on a case-by-case basis.

4.14 Swales – Swales shall be designed to accommodate the 10-year storm runoff within the proposed banks.

4.15 Ditches – Proposed ditches shall accommodate the 100-year runoff within the banks or a designated easement.

4.16 Perimeter Drain Collection – All residential development regulated by this Ordinance shall indicate on their plans an appropriately sized, common collection swale, ditch or subsurface pipe structure that provides a positive discharge, collects and effectively conveys perimeter drain discharge to an appropriate offsite outlet.

5.0 Emergency Access Easement Requirements

Emergency Access Easements shall be provided to Martinsville as follows:

5.1 Detention Structures

Detention structures serving drainage basins greater than five (5) acres or receiving runoff from off-site or being dedicated to the City shall have an emergency access easement around the 100-year flood elevation. This emergency access easement shall include all release control devices. The minimum emergency access easement requirements for detention structures shall be designated in the Martinsville SWECDM.

5.2 Conveyance Systems

An emergency access easement shall be provided for all conveyance systems that will be accepted by the City and/or be located adjacent to public or private roads or ways or lead to public conveyance systems located adjacent to public or private roads or ways, maintained by a homeowners association or receive off-site runoff. The minimum emergency access easement requirements for conveyance systems shall be designated in the Martinsville SWECDM.

The owner of the property shall be responsible for maintenance of the property's drainage facilities. The granting of an emergency access to Martinsville does not alter the property owner's duty to maintain the property's drainage facilities.

6.0 Flood Control and Management

Water bodies, roadways, structures and other property in Martinsville are subjected to flooding. In order to help minimize the occurrence and impact of flooding resulting in the loss of life and / or property, the following are required:

FEMA Studied Waterways:

6.1 FEMA Floodway / Floodplain Delineation – All plans submitted shall have the floodway (FW) and floodplain (FP) delineated on the grading plan(s) as scaled from the FEMA Flood Insurance Rate Maps. A reference to the panel number and date of the map shall also be included. Where no FW is delineated, the entire floodplain shall be assumed to be the FW.

6.2 100-year Base Flood Elevation (BFE) – The 100-year BFE shall be noted on the grading plan(s). This BFE shall be determined using the Flood Insurance Study (FIS) and the appropriate plate. A note referencing the plate number and date shall be included on the plans.

Non-FEMA Studied Waterways (Greater Than 1 Square Mile Drainage Basin):

6.3 DNR Floodway / Floodplain Delineation – All plans shall have the FW and FP delineated as determined by the DNR. A note referencing the DNR determination and a copy of the DNR response letter shall be provided prior to approval by the Martinsville BPWS.

Basins Less Than 1 Square Mile in Area:

6.4 Floodplain delineation – All waterways with drainage basins less than one (1) square mile and greater than 25 acres shall have the 100-yr BFE determined by methods outlined in the Martinsville SWECDM and delineated on the plans. Complete documentation of this determination shall be included with the submission.

No structures shall be located in a FEMA or DNR designated floodway. No structures shall be located within the floodplain of drainage basins less than one (1) square mile unless a floodway determination is conducted.

The lowest finished floor of all Structures located within a flood plain shall have a two (2) foot flood protection grade (FPG) with respect to the lowest floor of the structure.

7.0 Water Quality

Water quality considerations shall be incorporated in the submitted SWMPs and specifications in accordance with the Martinsville SWECDM to fulfill the following requirements:

7.1 Pretreatment Requirements – Every stormwater treatment practice shall have an acceptable form of water quality pretreatment, in accordance with the pretreatment requirements found in the current Martinsville SWECDM. Stormwater infiltration practices, or practices having an infiltration component, as specified in the Martinsville SWECDM, are prohibited, even with pretreatment, in the following circumstances:

7.1.1 Where stormwater is generated from highly contaminated source areas as identified by the IDEM, USEPA or the OCE;

7.1.2 Where stormwater is carried in a conveyance system that also carries contaminated, non-stormwater discharges;

7.1.3 Where stormwater is being managed in a designated groundwater recharge or well head protection area;

7.1.4 Under certain geologic conditions (e.g., karst) that prohibit the proper pretreatment of stormwater.

7.2 Treatment/Geometry Conditions – All stormwater management practices shall be designed to capture and treat stormwater runoff according to the specifications outlined in the Martinsville SWECDM. These specifications will designate the water quality treatment and water quantity criteria that apply to an approved stormwater management practices.

8.0 Soil Erosion and Sedimentation Control

Construction activities required as part of land development necessitate the removal of natural ground cover, creating the potential for erosion to occur. To minimize the movement of soil off site and its impact on water quality and on the ability of stormwater facilities to continue functioning properly, the following are required:

8.1 All persons who cause, in whole or in part, any earth change to occur shall provide soil erosion and sedimentation control so as to adequately prevent soils from being eroded and discharged or deposited onto adjacent properties or into a stormwater drainage system, a public street or right of way, wetland, creek, stream, water body, or floodplain. If the area of disturbed earth exceeds, or is planned to exceed, 0.5 acres (21,780 square feet) a Stormwater and Erosion Control Management Plan permit is required.

8.2 All development shall be in accordance with all applicable federal, state, and local ordinances, rules, and regulations.

8.3 If the owner or operator is required to prepare an Erosion and Sediment Control Plan (ESCP) as legislated by Rule 5 (327 IAC 15-5), such plan shall be deemed to fulfill the requirements of this Ordinance. In this case, all applicable state and federal permits or notices for land disturbing activities shall be obtained or filed prior to commencement of land disturbing activities. All applicable state or federal standards shall be adhered to when conducting land-disturbing activities. Copies of all applications, letters of intent submittals, plans and other erosion and sediment control related information developed for and/or submitted to state or federal authorities shall be copied to the OCE in addition to the ESCP. In addition to the requirements of Rule 5, any person disturbing property for construction of new buildings that will require regrading, alteration, or disturbance of the property outside of a five foot perimeter around the structure shall also require the filing of an erosion control permit. Plans for individual lots may be submitted on 8½ x 11 paper as long as the scale does not exceed 30’ to 1’’.

8.4 Prior to making any earth change on a development site regulated by this Ordinance, the developer shall first obtain a Stormwater Management Plan Approval permit from the City of Martinsville. The developer shall install stormwater runoff facilities and shall phase the development activities so as to prevent construction site stormwater runoff and off-site sedimentation.

8.5 During all construction activities on the development site, the OCE or their representative may inspect the development site to ensure compliance with the approved construction site runoff controls.

8.6 All methods used shall comply with the Indiana Handbook for Erosion Control.

10.0 Illicit Connections and Illegal Dumping

It shall be unlawful for any person to connect, dump, or otherwise discharge any substance or item not directly related to stormwater into any part of the storm drain system without written permission from the appropriate agency.

10.1 No person shall:

10.1.1 Cause or allow an illicit discharge to the storm drain system or any component thereof, or onto driveways, sidewalks, parking lots sinkholes, creek banks, or other areas that may drain to the storm drain system;

10.1.2 Connect, or allow to be connected any sanitary sewer to the storm drain system, including any sanitary sewer or septic system connected as of the date this ordinance is adopted.

10.1.3 Connect, or allow to be connected, any stormwater system to a sanitary sewer.

10.1.4 No person shall dump, deposit, release, leak, pump, pour, emit, empty, discharge, inject, bury, or dispose of any oil, anti-freeze, herbicide, pesticide, fungicide, animal or human excrement or any other solid, liquid, or hazardous waste to any part of the storm drain system or on any public or private premises in the City.

10.1.5 No person shall dispose of any leaves, brush, sticks, dirt, landscape debris, or other yard waste to any part of the storm drain system. This would include the blowing of grass, leaves, or other yard waste by mower or any other means into any part of the storm drain system.

10.2 Any person found in violation of the above prohibited activities shall be subject to a fine as given in Appendix "A", Table 2 for each violation and further shall be responsible for the cost of cleanup or correction of the prohibited action. If the responsible person has not taken corrective action within fifteen (15) calendar days after notification of a violation then the City or a designated third party may take whatever action is needed to cleanup or correct the prohibited act with the cost taken as lien on the property from which the violation originated.

11.0 Reporting

The OCE or an appointed representative shall report in the month of July of each year to the Martinsville BPWS an account of the status of the Ordinance. The report shall contain no less than the following:

11.1 The number of drainage reviews completed,

11.2 The number of Stormwater Management Plan Approvals granted,

11.3 The number of water quality Best Management Practices approved and installed in the City,

11.4 The number of Erosion and Sediment Control plans reviewed, by the OCE or their representative,

11.5 An accounting of total fees collected and dispersed as directed by the Ordinance,

11.6 A statement as to the effectiveness of the Ordinance to address ongoing drainage issues and concerns within Martinsville,

11.7 A statement as to the adequacy of the established fees to affectively cover expenses associated with the administration and implementation of the Ordinance.

12.0 Enforcement

In the case of non-compliance with this Ordinance or the SWECDM, the OCE has the right to issue abatement orders, stop work orders, injunctions, retention or calling in of performance surety and/or revoke Stormwater Management Plan Approvals.

12.1 If the applicant commences work for which the Stormwater Management Plan Approval (SWMPA) is required without compliance with the provisions of this Ordinance, the review fee shall be three (3) times the standard fee per Appendix "A", Table 1. If work for which the SWMPA is required is completed or substantially completed by the applicant without compliance with the provisions of the Martinsville Stormwater Management Ordinance, the review fee shall be ten (10) times the standard fee per Appendix "A", Table 1.

12.2 The OCE may revoke a SWMPA where the submittal packet, plans, and/or other supporting documents reflect either:

12.2.1 A false statement or misrepresentation as to material fact; or

12.2.2 Failure to comply with the requirements of this manual.

12.3 Whenever the OCE discovers the existence of any of the circumstances listed below, they are empowered to issue an order requiring the suspension of the land alteration. The stop-work order shall be in writing and shall state to what land alteration it is applicable and the reason for its issuance. One

(1) copy of the stop-work order shall be posted on the property in a conspicuous place and one (1) copy shall be delivered to the applicant, and if conveniently possible to the person doing the land alteration and to the owner of the property or his agent. The stop work order shall state the conditions under which land alteration may be resumed. A stop-work order shall be issued if:

12.3.1 Land alteration is occurring in violation of a drainage requirement and in such manner that if land alteration is allowed to proceed, there is a probability that it will be substantially difficult to correct the violation; or

12.3.2 Land alteration has been accomplished in violation of a drainage requirement and fifteen (15) calendar days has elapsed since written notice of the violation or noncompliance was either posted on the property in a conspicuous place or given to the person doing the land alteration, without the violation or noncompliance being corrected; or

12.3.3 Land alteration for which a SWMPA is required is proceeding without a SWMPA being in force. In such an instance the stop-work order shall indicate that the effect of the order terminates when the required SWMPA is obtained.

12.4 Failure to maintain an approved BMP and/or detention/retention facility in good working order in accordance with the approved SWMPA is a violation of this ordinance and the OCE may take any or all of the following actions: issue abatement orders; seek injunctive relief; impose penalties as given in Appendix "A", Table 2 of this ordinance; have repairs or maintenance performed by City forces or a third party with the cost taken as lien on the property; or any other lawful action necessary to bring the BMP and/or detention/retention facility into compliance with the approved SWMPA.

13.0 Facility Maintenance and Inspection Responsibilities

It shall be the responsibility of the developer/owners to maintain all detention/retention facilities, BMPs and drainage easements on their property. If there are more than one lot or holding served by the facility this shall be documented on the property deeds and recorded on the plat unless responsibility is formally accepted by a public body. This shall be determined prior to final drainage plan approval. In addition the developer/owners shall be responsible for getting an annual inspection of each BMP.

13.1 Failure of the developer/owner to maintain such easements or facilities as approved in the original plan shall constitute a violation of this ordinance and

subject the developer/owner to the penalty given in Appendix "A", Table 2 of this ordinance.

13.2 Annually, between May 1 and October 31, the developer/owner shall contact the OCE to schedule an inspection of each BMP and detention/retention facility maintained by the developer/owner. A fee shall be charged the owner/developer by the OCE for each BMP and detention/retention inspected. Payment shall be made to the Clerk/Treasure of the City of Martinsville. The fee shall be as given in Appendix "A", Table 1 of this ordinance. First year inspection fee is due and payable prior to issuance of a permit for a SWMPA.

13.3 Failure of the developer/owner to have each BMP and detention/retention facility inspected annually or failure to schedule the inspection between May 1st and October 31st shall be a violation of this ordinance and subject the developer/owner to the penalty given in Appendix "A", Table 2.

13.4 If the annual inspection finds a BMP or detention/retention facility to be deficient the developer/owner shall be given 60 calendar days to correct the deficiency. After 60 calendar days if the deficiency has not been corrected, or there has not been a good faith effort made on making corrections, it shall be a violation of this ordinance and subject the developer/owner to the provisions of Section 12.4.

14.0 Permit, Right-of-Entry and Surety

A permit is required for approval of Stormwater Management Plan. Said permit will be issued only when the requirements of this ordinance have been met together with payment of required fees and posting of the performance bond.

14.1 It is acknowledge by all persons for which a permit for a SWMPA is issued that the City Engineer, City Superintendent or their designated representative may enter onto the property of the Permittee, during normal working hours, for the purpose of inspecting all facilities for which a SWMPA permit was issued, including but not limited to pipes, swales, outfall structures, BMPs, retention/detention facilities and all related structures and installations associated with stormwater management including erosion control. The Permittee shall assist City personnel in gaining access to the various facilities for performance of the inspections.

14.2 A performance surety in the form of Cash, Bond or Irrevocable Letter of Credit shall be presented to the City of Martinsville as a condition for issuance of a permit for SWMPA. The surety shall be in an amount equal to twenty (20) percent of the total cost of work to be performed on the site, excluding buildings, including but not limited to, excavation and grading; stormwater system; sanitary sewer system; water system; curbs, sidewalks and pavement; erosion control; landscaping and area lighting, with $1,000

being the minimum surety. The SWMPA surety is in addition to any other performance bond that might be required by the City, Morgan County, or State of Indiana. When construction is complete the Permittee shall notify the OCE which shall perform, within fifteen (15) calendar days, an initial inspection of the work for which the SWMPA permit was issued and inform the Permittee of acceptance or deficiencies. After not less than 1-year from the date of initial acceptance by the OCE and all disturbed earth areas are re-vegetated (grass areas and plantings are living and will established), the Permittee shall notify the OCE for a surety release inspection. The OCE will perform the inspection within fifteen (15) calendar days of notification. When the OCE is satisfied that the work for which the SWMPA was issued are performing satisfactorily, including grass and plantings are living, then the OCE will notify the Martinsville Clerk/Treasure that the surety may be released to the Permittee. If deficiencies are found the Permittee must make repairs and or corrections within thirty (30) calendar days and after a satisfactory second inspection by the OCE the surety will be released. Permittee is required to pay the cost for the time it takes the OCE to make a second inspection at the rate established in Appendix "A", Table 1 for engineering review. Permittee must pay this cost before the surety will be released.

APPENDIX "A"

STORMWATER MANAGEMENT PERMIT, REVIEW and INSPECTION FEES

TABLE 1

ALL FEES ARE NONREFUNDABLE

(1)	Minor Subdivision - Primary & Final	$ 250.00
(2)	Major Subdivision – Primary	$ 450.00
(3)	Major Subdivision (Each Section) - Secondary	$ 250.00
(4)	Planned Unit Development Preliminary Plan	$ 250.00
(5)	Planned Unit Development Final Detailed Plan (Each Phase)	$ 450.00
(6)	Revision or Amendment to a Recorded or Approved Plat	$ 250.00
(7)	Lot Site Plan Review – Business, Industrial & Multi-family	$ 350.00
(8)	Lot Site Plan Review – Residential single and two-family	$ 100.00
(9)	Revision or Amendment to Approved Site Plan – Business, Industrial & Multi-family	$ 250.00
(10)	Revision or Amendment to Approved Site Plan – Residential single and two-family	$ 75.00
(11)	Annual inspection for each permitted BMP or retention/detention facility	$ 250.00

EACH OF THE ABOVE MINIMUM BASE FEES INCLUDES A $50.00 ADMINISTRATIVE FEE AND ENGINEERING REVIEW FEE AT THE RATE OF $100.00 PER HOUR. IF THE ENGINEERING REVIEW REQUIRES MORE TIME THAN THE ABOVE FEES COVERS THEN THE ADDITIONAL TIME REQUIRED FOR REVIEWS WILL BE CHARGED AT THE RATE OF $100.00 PER HOUR. THE FEE SHALL BE PAID IN FULL TO THE CITY OF MARTINSVILLE BEFORE A PERMIT IS ISSUED.

PENALTIES FOR STORMWATER MANAGEMENT ORDINANCE VIOLATIONS

TABLE 2

(1)	Illicit Connections and/or Illegal Dumping per, Section 10.0	Not less than $500.00 or more than $5,000.00 per violation, plus cleanup cost.
(2)	Failure to maintain an approved BMP and/or retention/detention facility, Section 12.4	Not less than $200.00 or more than $1,000.00 per BMP or facility per violation.
(3)	Failure to maintain plan approved easements, Section 13.1	Not less than $100.00 or more than $500.00 per violation.
(4)	Failure to have annual inspection of BMP and/or retention/detention facility, Section 13.3	$300.00 for each BMP and/or retention/detention facility

CITY OF MARTINSVILLE

STORMWATER and EROSION CONTROL DESIGN MANUAL

JUNE 2004

Table of Contents

Section No.		Title	Page
1.0		Introduction	1
2.0		Required Submittals	1
	2.1	Plans	1
	2.2	Report	2
3.0		Hydrology – Runoff Estimation	3
	3.1	Rational Method	3
	3.2	Time-of-Concentration	4
	3.3	Curve Number	4
	3.4	Rainfall	4
	3.5	Downstream Analysis	5
4.0		Hydraulics	6
	4.1	Detention Design	6
	4.2	Pipe Design	6
	4.3	Inlet Capacity and Gutter Spread	7
	4.4	Open Channel / Ditch / Swale Design	8
	4.5	Flood Modeling	9
5.0		Detention Design Requirements	9
	5.1	Bypass Flow	9
	5.2	Emergency Spillway	9
	5.3	Dry Pond Requirements	9
	5.4	Wet Pond Requirements	10
	5.5	Dams and Embankment Requirements	10
	5.6	Parking Lot Detention Requirements	10
	5.7	Underground Detention Requirements	10
6.0		Easements	11
7.0		Materials	12
	7.1	Storm Sewer Pipe Materials	12
	7.2	Subsurface Drainage Tiles	13
	7.3	Manhole and Box Inlet Materials	14

8.0		Standard Details	15
9.0		Water Quality	15
	9.1	Treatment Objective	15
	9.2	Plan Requirements	17
	9.3	Operations and Maintenance Manual	17
	9.4	Water Quality Volume / Rate Calculations	18
	9.5	Pretreatment	20
	9.6	Primary Treatment	20
	9.7	Specific Practices	20
	9.8	Regional Stormwater Management Plans	21
10.0		Soil Erosion and Sedimentation Control	21
	10.1	Plan Requirements	24
	10.2	General Criteria for Erosion and Sediment Control Practices	24
	10.3	Specific Practices	25
11.0		Deviation from Approved Plans	26
12.0		Enforcement	26

APPENDIX I	Stormwater charts, graphs, tables and forms
APPENDIX II	Approved Trees
APPENDIX III	Standard Details

1.0 Introduction

The City of Martinsville Office of the City Engineer (OCE) is required by the City of Martinsville Stormwater Management and Erosion Control Ordinance (MSWMECO) to provide the Stormwater and Erosion Control Design Manual (SWECDM) guidelines for the engineering and design of stormwater systems and erosion control practices in the City of Martinsville. This manual applies to all areas within the corporate limits of the City of Martinsville.

Fees for SWMPA permits, engineering review, inspections together with penalties for violation of the MSWMECO are given in Appendix I of said ordinance which also provides for a fee to cover the printing cost of this manual.

Definitions used in this manual are given in the MSWMECO.

2.0 Required Submittals

All development projects submitted to the OCE shall include the following:

2.1 Plans

A complete set of plans on 24 by 36 inch sheets signed and stamped by a registered professional. The plan sheets shall be provided at a scale of 10, 20, 30, 40, or 50 feet to 1-inch only and include at a minimum:

2.1.1 A title sheet with the project name and address, a county location map and a vicinity map clearly indicating the project location, the name, address and phone number of the developer/ owner and design engineering firm, and phone number of the OCE;

2.1.2 A plan sheet with the existing topography at no greater than a 2 foot contour interval, 1 foot being preferred; and providing a USGS/NAVD 29 reference datum benchmark. Single family structures may be exempted from this requirement by the OCE;

2.1.3 A plan sheet or sheets with the proposed development layout and grading. The topography should be at no greater than a 2-foot contour interval, 1 foot being preferred. All grade breaks should be defined and labeled with spot elevations. The grading plan shall also include the 100-year base flood elevation (BFE) as required in Section 4.5 with notation as to the source of the BFE (e.g. The Flood Insurance Rate Study, Plate 2c, 2001). All appropriate floodplains shall also be

delineated and the source noted (e.g. FIRM Map 123456, dated May 3, 2001);

2.1.4 A plan and profile of the proposed storm sewer system for all projects. Easement lines and right-of-way limits shall be included and clearly labeled on the plan view;

2.1.5 A separate erosion and sediment control plan showing the location of all erosion control practices and including details of the installation methods shall be provided;

2.1.6 A detail sheet with installation and dimensional details for all proposed storm conveyances. Please refer to the appendix for standard details of conveyances accepted by the OCE;

2.1.7 A certified survey showing residential density, roadway and drainage easements, and right-of-way.

2.1.8 All the information required by Improvement Location Permit section of the City of Martinsville Zoning Ordinance.

2.2 Report

A drainage report than includes:

2.2.1 A drainage narrative. This narrative shall include a description of: the existing and proposed runoff patterns; the downstream receiving facilities; summary of all calculations; all assumptions used in the calculations;

2.2.2 Basin maps. Basin maps shall be submitted for the pre- and post-developed project and correspond to the calculations/computer models. These basin maps shall include all off-site basins, detention design basins, and pipe inlet / catch basin areas. Basin areas should be clearly labeled on the maps with respect to the basin labels used in the computer modeling; Further, the post-development basins shall show no runoff from parking lots, access drives or buildings directed onto public right-of-way;

2.2.3 Computer model input and output reports. The computer reports shall include all input parameters (time-of-concentration, basin areas, curve numbers, rainfall depths, rainfall distributions, etc.) and copies of the corresponding calculations. A node diagram shall be provided that summarizes the computer model routing. Summary reports showing all the inputs. Detailed hydrographs are optional and may be requested as required by the OCE;

2.2.4 A title sheet. The drainage report shall be signed, dated and stamped by a registered professional.

2.2.5 A written narrative is required with the submittal stating that the drainage plans are in compliance with the provisions of the MSWMECO and this SWECDM.

3.0 Hydrology – Runoff Estimation

The most critical parameter in stormwater engineering is estimating the amount and rate runoff will occur for rainfall events. This estimation first provides the basis for determining if detention is required and then the quantity of storage necessary. Two methods shall be considered acceptable by the OCE; the rational method, for development areas with a total watershed less than or equal to 5 acres, and hydrograph generating / routing techniques for developments with a total watershed greater than 5 acres. The same methodology must be used to determine the pre- and post-developed runoff rates.

3.1 Rational Method

The rational method is based on the equation,

Q = C i A

Where Q = is the peak runoff rate, cubic feet per second (cfs)

C = the runoff coefficient (Appendix I, Table 1.1.1)

i = the rainfall intensity (in/hr)

A = area of the drainage basin in acres.

The rainfall intensity is chosen corresponding to the time-of-concentration. The time-of-concentration shall be calculated as described in 3.2 below.

The following steps summarize the procedure:

- Determine the watershed area;
- Estimate from Appendix I, Table 1.1.1 the runoff coefficient C or the composite area runoff coefficient;
- Calculate the time-of-concentration (per Section 3.2);
- Determine the rainfall intensity (per Section 3.4.1).

3.2 Time-of-Concentration (Tc)

The time-of-concentration shall be determined using the Time of Concentration or Travel Time Worksheet in Technical Release 55 (TR-55). This method addresses the time-of-concentration in three parts, sheet flow, shallow concentrated flow and channel flow. Appendix I contains a copy of the worksheet (Worksheet 1.2.1), a table of Manning's roughness coefficients for sheet flow (Table 1.2.2), and the graph for determining the average velocity for shallow concentrated flow (Figure 1.2.3). A minimum time-of-concentration of 5 minutes shall be used for all calculations. In addition, only a 5 minute time-of-concentration may be assumed for calculations. All other times-of-concentration must be supported with calculations.

3.3 Curve Number

The curve number shall be calculated using the TR-55 methodology. The composite curve number shall be calculated and documented using Worksheet 1.3.1 and Tables 1.3.2 and, 1.3.3 (from TR-55) as appropriate for the project site. The Worksheet and Tables are provided in Appendix I.

3.4 Rainfall

3.4.1 Intensities – Rational Method

The rainfall intensities for use in the rational method can be determined using the following equation:

$\mathbf{i = a / (t + b)^N}$ where:

i = intensity, in / hr

t = time (min)

a, b, and N are values from Table 1.4.1.1

These variables were determined from the Indianapolis Intensity-Duration-Frequency (IDF) curves. Table 1.4.1.2 provides intensities for specific durations and return periods.

3.4.2 Rainfall Depths – Hydrograph Methods

Rainfall depths for various storm durations and return periods are given in Table 1.4.2.1.

3.4.3 Rainfall Distribution – Hydrograph Methods

All hydrographs shall be generated using the appropriate Huff, 50% rainfall distribution. The Huff Distributions were derived from historical rainfall data in the Midwest. The first quartile is applicable to storm durations up to 6 hours, the second quartile applicable for storm duration of 6 up to 12 hours, third quartile for durations between 12 and 24 hours and the fourth quartile for storm durations of 24 hrs and greater.

A table of the Huff quartile ordinates is given in Appendix I (Table 1.4.3.1).

3.5 Downstream Analysis

Downstream analysis may be used, upon approval of the OCE, to demonstrate that a proposed development's runoff will not increase the peak runoff in the receiving watercourse if no detention is provided. The proposed development area must be 1% or less of the watershed area at the discharge location.

Downstream analysis shall be performed by creating an existing conditions hydrograph for the watershed without the development area and an existing hydrograph for the proposed development. These two hydrographs are to be added together to determine the peak existing conditions flow. A third hydrograph of the proposed development conditions shall then be generated and added to the existing upstream watershed hydrograph to determine the developed peak flow. If there is no increase, then detention may be waived.

Downstream analysis may be performed for open channel areas only. Areas with significant pipe systems upstream or downstream of the subject site may not use downstream analysis. In addition the OCE reserves the right to require detention in lieu of downstream analysis as appropriate.

Downstream analysis submissions shall include basin maps, curve number documentation, Tc documentation, and all hydrograph inputs and outputs, etc.

4.0 Hydraulics

4.1 Detention Design

All detention ponds shall meet the minimum requirements of detaining the post-developed 100-year storm and releasing the runoff at the pre-developed 10-year peak storm release rate. Likewise, the post-developed 10-year peak storm shall be detained and released at the pre-developed 2-year peak storm release rate.

4.1.1 Rational Method

The rational method may be used for detention design on developments less than or equal to 5 acres contributing area. The allowable release rate shall be calculated using a runoff coefficient of 0.10.

4.1.2 Hydrograph Methods

Detention ponds collecting watersheds greater than 5 acres and facilities not designed using the rational method shall be designed by hydrograph routing techniques. The 0.5, 1, 2, 3, 6, 12, and 24-hour duration storms shall be routed to determine the peak release rates, maximum pond elevation and required peak volumes. The peak elevation shall be shown on the grading plan.

4.1.3 In-Line Detention

In-line detention should be avoided to the extent practicable. However, when in-line detention is proposed, the pond shall be designed using the characteristics of the site only as required in Section 4.1.2. A weir or other discharge structure shall be installed at the peak elevation as determined in Section 4.1.2 to accommodate the off-site or flow-through runoff.

4.2 Pipe Design

The minimum pipe diameter shall be 12 inches and the minimum full flow velocity shall be 2.0 fps for all pipes. Orifice plates shall be used when smaller openings are required to restrict flow. All pipes must have a minimum of 1.5 feet of cover and trash racks shall be provided for pipe inlets and outlets as well to prevent entry by wildlife or children.

Pipes must be designed to accommodate the 10-yr flow with the Hydraulic Grade Line (HGL) below the crown of the pipe. An overflow route to the detention facility shall be provided for flows greater than the 10-yr storm. If an overflow route is unavailable, then the pipes should be designed to

accommodate the 100-yr flow with the HGL below the top of casting elevations or within an easement.

Pipes may be designed using the Manning's equation. When the total design flow reaches 90% of the Manning's pipe capacity, hydraulic gradeline calculations shall be submitted to document the 10-year flow is below the crown of the pipe.

4.2.1 Manning's Equation

Manning's equation should be used for the design of all stormwater pipes. Manning's equation is given as the following:

$$\mathbf{Q = (1.49 / n)(A)(R^{2/3})(S^{1/2})}$$

Where Q = is the peak runoff rate, cubic feet per second (cfs)

n = the Manning's "n" value for pipes (Table 1.5.1.1)

A = the area of the pipe (ft^2)

P_w = the wetted perimeter of the pipe

R = the hydraulic radius of the pipe (A / P_w)

A storm sewer tabulation table and headloss computation table (Tables 1.5.1.2 and 1.5.1.3) are provided in Appendix I.

4.2.2 Tailwater

The Manning's equation addresses only the flow conditions of the pipes and assumes a free outfall. When proposed pipe outfalls are submerged or may be subject to submergence, the starting depth of water (tailwater) shall be included in the analysis and sizing of the pipes. Pipes subject to submergence shall use, as a minimum, a starting tailwater condition equivalent to the 10-year elevation of the receiving facility. All tailwater analysis methods must be approved by the OCE.

4.3 Inlet Capacity and Gutter Spread

4.3.1 Inlet Capacity

Inlets shall be designed to properly convey the 10-yr storm event. Grate castings shall provide a sufficient grate opening to collect the 10-yr storm event with a maximum depth above the casting of 9-inches and shall not affect the surrounding structures. Emergency overflow routing should be provided for storm events greater than the 10-yr storm.

4.3.2 Gutter Spread

Inlets within all roadway gutterlines shall be spaced to provide a minimum open lane width of 12-feet. Inlets within multi-lane roadways (3 or more lanes) shall keep a minimum of one (1) 12-foot wide lane open in each direction. The gutter spread should be determined using the 10-yr storm event. The gutter spread shall be computed using the following equation:

$$\mathbf{Q = (0.56 / n)(S_x^{1.67})(S_L^{0.5})(T^{2.67})}$$

Where Q = is the peak flow through the gutter on each side of the inlet

n = the Manning's roughness coefficient (Appendix I, Table 1.5.2.2)

S_x = the cross slope of the pavement from the crown to the gutter (ft/ft)

S_L = the longitudinal grade/slope of the street (ft/ft)

T = the width of water extending into the roadway from the vertical gutter face (ft)

Once the peak gutter flow is determined, the maximum drainage area can be calculated using the rational method and the basin characteristics. For a basin consisting only of the roadway itself, the maximum area can be calculated by using a fixed width of the roadway from the crown to the curb and determining the total length required to achieve the maximum flow.

4.4 Open Channel/ Ditch / Swale Design

4.4.1 Capacity

Open channels (swales and ditches) shall be designed using the Manning's equation as outlined above in Section 4.2.1 and using Appendix I, Table 1.5.3.1. The channels should be designed to convey the 10-yr storm event within the banks. The 100-yr storm event should remain within the easement of the ditch. The side slopes on all drainage ditches shall be no steeper than 2 (horizontal) to 1 (vertical). The minimum slope for all grass-lined swales shall be 1.0%. Slopes less than 1.0% will be accepted with appropriate invert treatment. Invert treatment may consist of concrete paved channel, or a sub-surface underdrain. In no case shall a slope less than 0.30% be accepted for swales.

4.4.2 Lining

All channels shall be lined with material capable of withstanding the shear stress from the proposed design velocity. Channels that convey runoff with velocity greater than 5 fps will be required to have invert treatment. A table of channel linings and maximum velocities is provided in Appendix I (Table 1.5.3.2).

4.5 Flood Modeling

On lands that adjoin a ditch, stream, or river that has a watershed of 25-acres or greater, upstream from the subject parcel, the base flood elevation (BFE) shall be provided for the entire stream reach through the affected property. If available the BFE shall be determined from a Flood Insurance Rate Study (FIS) or DNR approved study. If no published BFE is available for the watershed the submitting engineer must determine the BFE. The US Army Corps of Engineers HEC-2 or HEC-RAS programs shall be acceptable methods. Any other methods must be approved by the OCE.

5.0 Detention Design Requirements

5.1 Bypass Flow

Detention facilities bypassing off-site flow shall provide adequate capacity for the design flow. The proposed bypass shall provide erosion protection, such as riprap over the entire bank for pond overflow weirs designed to bypass off-site runoff.

5.2 Emergency Spillway

An emergency spillway and/or emergency overflow route will be required on all detention facilities. The emergency spillway shall be designed to accommodate the 100-year peak storm inflow to the structure with 1 foot of freeboard above the maximum anticipated flow through the spillway. Where off-site flow is bypassed over the same structure, the spillway shall accommodate both the peak combined on-site 100-year flow and the off-site 100-year flow and maintain the 1 foot of freeboard above the maximum anticipated flow through the spillway.

5.3 Dry Pond Requirements

Dry detention ponds shall have:

- A minimum 1% bottom slope within the pond must be maintained to the outlet, or;

- Acceptable invert treatment (paved invert, underdrains, etc.) must be installed when a minimum 1% slope is unable to be maintained;

- In no case shall the bottom slope of the dry detention be less than 0.3%;

- A bank slope of 3:1 or shallower for grass side slopes;

5.4 Wet Pond Requirements

Wet ponds shall include:

- A minimum depth of 10 feet from the normal pool elevation to the bottom of the pond;

- A maximum vegetative bank slope of 3:1 above the normal pool level and continuing at the same slope for 15 feet into the pond from normal pools waters edge to create a safety ledge;

- A maximum slope beyond the 15 foot safety ledge is 1 ½:1 (See Appendix III).

5.5 Dams and Embankment Requirements

Dams and Embankments shall be constructed in accordance with the DNR Manual on Dams:

- Demonstrate suitable foundation materials and or contain a suitable cutoff to prevent excessive seepage;

- Be designed with an appropriate core fill and an antiseep collar;

- Have a suitable top width and finished side slopes;

- Have a minimum acceptable freeboard and appropriately sized emergency spillway.

5.6 Parking Lot Detention Requirements

Parking Lot Detention Facilities:

- May not accept runoff from off-site drainage basins;

- May not pond to a depth greater than 9-inches;

- Have an appropriate emergency overflow route;

5.7 Underground Detention Requirements

Underground Detention Facilities:

- May not accept runoff from off-site drainage basins;
- Must include emergency overflow facilities including a flow path.

Appropriate details of each pond design must be included on the plans. The appropriate normal pool elevation, 2-yr, 10-yr, and 100-yr water surface elevations must also be indicated on the grading plan.

6.0 Emergency Access and Drainage Easements

Emergency access easements (easement) shall be provided for all stormwater conveyances and facilities to be maintained by City of Martinsville. In addition, easements shall be provided for all conveyances, including ponds, carrying runoff from off-site drainage basins and for any pond serving greater than 5 acres. Regulated Drains (proposed and existing) may have additional easement requirements to ensure the provisions of this Manual and the MSWMECO are met. The OCE shall be contacted to determine any special requirements prior to design. All stormwater conveyances must be centered within the required drainage easement. Easements for all drainage conveyances, retention/detention facilities, floodways and floodway fringes, and BMP's must be exclusively Drainage Easements and can not be shared with utilities or used as vehicular access easements.

Stormwater BMP's used for the water quality requirements must maintain easements as well. Stormwater ponds shall maintain the same easement as required for a detention facility. Off-line manufactured BMP's structures should maintain an easement that includes the connecting manholes and the weir structure. All easements should be clearly included on the plans. Water quality easements should be included in the O&M manual as outlined in Section 9.3. On a case-by-case basis the OCE may determine additional easement requirements. The OCE may require such additional easement requirements as are necessary to ensure the provisions of this Manual and the MSWMECO are met. The following table summarizes the easement widths required

Table 6.0

Stormwater Facility Description	**Minimum Easement (ft)**
Detention Pond/Facility (Serving > 5.0 ac) (including all stormwater pond BMP's)	20 horizontally from the 100-year elevation of the pond – Detention facilities shall not be constructed within the public right-of-way.
Storm Sewer Pipe and structures (< 3 feet diameter)	20 (10' from center of pipe/structure)
Storm Sewer Pipe and structures (> or = 3 feet diameter)	25 (12.5' from center of pipe/structure)
Drainage Ditch	30
Drainage Swale	20
Structural and Manufactured BMP's	20 from the outside of BMP – Manufactured BMP units must maintain 20 feet from the center of the unit or 10 feet from the outside of the unit (whichever is greater) and include the connecting manholes when in an off-line configuration

7.0 Materials

7.1 Storm Sewer Pipe Materials

Storm sewers shall be defined as a network of pipe conduits and concrete manholes and/or inlet structures, which collect and convey stormwater (surface or subsurface water) from one facility to another facility.

Subsurface drainage tiles, underdrains, roof downspouts and drains, building drains, and foundation drains are not considered as part of the requirements for storm sewers.

The following is a table that outlines pipe materials and the appropriate type of facility that each material may be used. Public facilities are classified as any stormwater facility located outside the public right-of-way but which will be maintained by the City of Martinsville or any state, town or city departments. Right-of-way (R.O.W.) facilities are within the public right of way for streets and roads and Private facilities include all privately owned and maintained stormwater facilities outside of the public right-of-way or drainage easements.

Table 7.1

MATERIALS	R.O.W. FACILITIES	PUBLIC FACILITIES	PRIVATE FACILITIES
Reinforced Concrete Pipe (RCP) – All pipe sizes (ASTM C 76)	YES	YES	YES
Elliptical RCP – All pipe sizes (ASTM C 507)	YES	YES	YES
Pre-cast RCP Box Culverts Sections– All sizes (ASTM C 789)	YES	YES	YES
Fully Bituminous Coated Corrugated Metal Pipe (CMP) – All sizes	YES	YES	YES
Arch Galvanized CMP – All pipe sizes	NO	YES	YES
Galvanized CMP – All pipe sizes (ASTM A 444, A 760)	NO	YES	YES
High Density Polyethylene Pipe (HDPE) 12” to 24”	NO	YES	YES
High Density Polyethylene Pipe (HDPE) 27” to 48”	NO	PER OCE APPROVAL	YES
Polyvinyl Chloride (PVC) 12” to 24” (A-2000 or equivalent)	YES	YES	YES
Polyvinyl Chloride (PVC) 27” to 36” (A-2000 or equivalent)	PER OCE APPROVAL	PER OCE APPROVAL	YES
Other	PER OCE APPROVAL	PER OCE APPROVAL	PER OCE APPROVAL

7.2 Subsurface Drainage Tiles

Subsurface tiles (all underdrains, roof downspouts and drains, building drains, and foundation drains) shall not accept any surface water flows. Any system designed to collect surface runoff shall be designed to the minimum pipe standards in Section 7.1 above. Subsurface systems shall provide a cleanout at a minimum interval of 500’. Connections to the

main storm sewer system must be at an approved structure. Subsurface drain connections to other subsurface drains may utilize approved wye and/or tee connections.

Accepted pipe materials to be used for subsurface tiles are outlined in the table below:

MATERIALS	ASTM
Corrugated Polyethylene tubing and fittings – up to10”	F 405 & F 667
Corrugated Polyvinyl Chloride (PVC) tubing and fittings – up to 10”	F 800
PVC corrugated pipe with smooth interior walls and fittings – up to 10”	F 949

The minimum cover above subsurface tiles shall be 18” and must be properly bedded with #8 stone. See standard detail in Appendix III for additional bedding requirements.

7.3 Manhole and Box Inlet Materials

A storm sewer manhole or concrete box inlet structure must be installed at the end of each conduit segment; at all changes in material, grade, size, and alignment of the storm sewer pipe; at all pipe connections; and at a maximum interval of 400’.

Wyes, tees, and elbows may be used for underground detention facilities as allowed by the OCE. Underground detention facilities must include appropriate risers to provide for maintenance access to the detention facility. In addition, manufactured yard inlets may be used for private stormwater facilities per the discretion of the OCE.

Outlet structures must consist of a concrete box inlet or manhole with appropriate weir or orifice cut-outs. In no case shall a vertical standpipe be used in place of a manhole or inlet.

Benchwalls shall be shaped and formed within each manhole and inlet to provide a smooth conveyance of flows through the structure. The benchwalls shall form a clearly defined channel, to a minimum height of 50% of the diameter of the pipe, and constructed at a minimum ½” per foot slope to the manhole wall. A standard benchwall detail is provided in Appendix III.

All manhole and box inlets must be placed on a minimum 6" stone bedding to provide a stable base. Standard details for manholes, inlets and other stormwater conveyances are provided in Appendix III.

8.0 Standard Details

Standard details for manholes, inlets, pipe bedding swales and other common stormwater conveyances are provided in Appendix III at the end of the manual.

9.0 Water Quality

Unless judged by the OCE for a project to be exempt, the following criteria shall be addressed for stormwater management at all sites:

The plan sheets shall specify stormwater best management practices (BMPs) (stormwater quality treatment systems) to be implemented, operated and maintained to meet water quality requirements. Because water quality requirements vary depending on the uses of the water bodies in the watershed, a framework methodology is provided here.

9.1 Treatment Objective

City of Martinsville has adopted a policy that the control of stormwater runoff quality will be based on the management of total suspended solids (TSS). Control of sediment is required for construction site runoff within the City.

For new and existing development areas that disturb one (1) or more acre of land, or disturbances of less than one (1) acre of land that are part of a larger common plan of development, whether for sale or lease, (if the larger common plan will ultimately disturb one (1) or more acres of land), or for new and existing development that disturb more than 0.5 acres, structural BMPs shall be designed to comply with this manual. It is presumed that a BMP complies with this standard if it is:

- sized to capture the prescribed water quality volume (WQ_v) or water quality treatment rate,
- constructed properly, and
- maintained regularly.

The following requirements shall be fulfilled:

(1) All stormwater runoff generated from land development and land use conversion activities shall not discharge untreated stormwater runoff directly into a jurisdictional wetland or local water body without adequate treatment. Where such discharges are proposed,

the impact of the proposal on the wetland shall be assessed using a method acceptable to the OCE. In no case shall the impact be any less than allowed by the Army Corp of Engineers (ACOE) or IDEM.

(2) Infiltration practices shall not be allowed where stormwater is generated from highly contaminated source areas as recognized by the EPA, IDEM or the OCE; where stormwater is carried in a conveyance system that also carries contaminated, non-stormwater discharges; where stormwater is being managed in a designated groundwater recharge area; and under certain geologic conditions (e.g., karst) that prohibit the proper pretreatment of stormwater.

(3) Land development projects shall comply with the water quality performance-based criteria in accordance with the following:

A BMP shall be located, designed, and maintained to achieve the target pollutant removal efficiencies to effectively reduce the pollutant load to the required level.

(4) Stormwater discharges to critical areas with sensitive resources (i.e., cold water fisheries, shellfish beds, swimming beaches, recharge areas, water supply reservoirs) may be subject to additional criteria, or may need to utilize or restrict certain stormwater management practices at the discretion of the OCE.

(5) Industrial sites which are listed under the Standard Industrial Code are required to prepare and implement a stormwater pollution prevention plan, and shall file a notice of intent **(**NOI) under the provisions of the National Pollutant Discharge Elimination System (NPDES) general permit. The stormwater pollution prevention plan requirement applies to both existing and new industrial sites.

(6) Stormwater discharges from land uses or activities with higher potential pollutant loadings may require the use of specific structural BMPs and pollution prevention practices at the discretion of the OCE.

(7) Prior to design, applicants are required to consult with the OCE to determine if they are subject to additional stormwater design requirements.

(8) Discharges will not be allowed directly into sinkholes or fractured bedrock, without treatment that results in discharge meeting Indiana ground water quality standards as referenced in 327 IAC 2-11.

(9) Any stormwater practice that is a Class V injection well must ensure that the discharge from such practices meets Indiana ground water quality standards as referenced in 327 IAC 2-11.

9.2 Plan Requirements

Pursuant to the Ordinance all Stormwater Management Plans must include the following:

(1) Location, dimensions, detailed specification, and construction details of all post construction stormwater quality treatment BMPs.

(2) A description of those measures (BMPs) that that will be installed to treat stormwater discharges that will occur after construction activities completed.

(3) A sequence describing when each post construction stormwater quality treatment BMP will be installed.

(4) Stormwater quality treatment BMPs that will remove or minimize pollutants from stormwater run-off.

(5) Stormwater quality treatment BMPs that will be implemented to prevent or minimize adverse impacts to stream and riparian habitat.

(6) An Operation and Maintenance manual.

9.3 Operations and Maintenance Manual

Each BMP on a site must have an operations and maintenance (O&M) manual. The O&M manual must be submitted with the Stormwater Management Plan. The approved O&M manual must be signed by and provided to the BMP owner and the OCE. The O&M manual will include the following:

(1) BMP owner name and contact person, address, and contact information, i.e. business phone, fax, email, pager, cell phone, etc. as appropriate;

(2) Site drawings clearly indicating the location of the BMP and including plan and cross-sectional details, showing the BMP and applicable features. Dimensions, easements (as previously defined in this manual), outlet works, forebays, signage, connecting structures, weirs, invert elevations, etc. should be clearly indicated on the plans and details;

(3) Guidance on both owner-required periodic inspections and inspections to be performed by the OCE;

(4) Guidance on routine maintenance, including mowing, litter removal, woody growth removal, etc.;

(5) Guidance on remedial maintenance, such as inlet replacement, outlet work, etc.;

(6) Guidance on sediment removal, both narrative and graphical, describing when sediment removal shall occur in order to insure that the BMP remains effective as a water quality and/or quantity control device;

(7) A statement that the OCE has the right to enter the property to inspect the BMP;

(8) A tabular schedule showing inspections and maintenance requirements; and

(9) Identification of the property/BMP owner as the party responsible for maintenance, including cost.

(10) A text or graphic narrative of the easement around the BMP.

Completed inspection forms must be maintained by the BMP owner and produced upon request by the OCE. The OCE must be notified of any changes in BMP ownership, major repairs, or BMP failure in writing within 30 days of the change. The letter should be addressed to:

City of Martinsville
Office of City Engineer
P.O. Box 1415
Martinsville, IN 46151

In the event that the OCE finds a BMP in need of maintenance or repair, the OCE will notify the BMP owner of the necessary maintenance or repairs and give the landowner 60-calendar days for completing the maintenance or repairs. If the maintenance or repairs are not completed within the 60-calendar days, the OCE shall perform the repairs or maintenance and bill the landowner for the actual costs for the work and if not paid shall become a lien on the property.

9.4 Water Quality Volume / Rate Calculations

In order to protect and maintain water quality, a portion of the stormwater runoff created by the development project must be treated. BMPs may be

designed to treat on a volumetric basis or flow rate basis. The runoff volume to be treated or the peak flow rate to be treated by a BMP shall be determined by the following methods.

9.4.1 Water Quality Volume

The volume of stormwater runoff to be captured, stored and treated is called the Water Quality Volume ("WQv").

a. The formula for determining WQv is:

$$\mathbf{WQv = \frac{(P)\,(Rv)\,(A)}{12}}$$

where:

WQv = water quality volume (acre-feet)
P = rainfall depth (inches); the volume of rainfall for 90% of the storm events which produce runoff in the watershed annually (e.g., 1.0 inches)
A = project area (acres)
Rv = volumetric runoff coefficient; [0.05 + 0.009(I)], where I is the percent impervious cover on the site as defined by the area that does not have permanent vegetative or permeable cover.

9.4.2 Water Quality Treatment Rates

The peak water quality treatment rate shall be determined using hydrograph generation methods. The hydrograph shall use the Huff 1st Quartile, 50% distribution with a 0.5 inch rainfall and a one hour storm duration. The peak rate of this hydrograph shall be used as the minimum water quality treatment rate.

Documentation for all proposed manufactured BMPs shall be provided clearly demonstrating the BMP will remove 80% of the particles listed below at this peak flow rate.

Runoff Particle Distribution

Particle Size (μm)	% of TSS
250	20
125	40
75	40

9.5 Pretreatment

Several practices that are not capable of providing water quality treatment can nonetheless function in a pretreatment role or as a supplemental practice. These practices can often be incorporated into the Stormwater Management Plan design as pretreatment devices, to treat a small portion of a site, or in retrofit or redevelopment applications. Some of these practices, including dry ponds and underground storage vaults, can be used to meet water quantity goals such as channel protection and flood control requirements. In addition, some of these practices may be helpful to reduce the total volume of runoff from a site or to disconnect impervious surfaces. Some practices not currently deemed effective for stand-alone water quality treatment include:

- Catch basin inserts
- Dry ponds
- Underground vaults (designed for flood control)
- Oil/grit separators
- Filter strips
- Grass channels (includes ditches designed primarily for conveyance as well as modified practices that can achieve some pollutant removal)
- Deep sump catch basins
- On-line storage in the storm drain network
- Porous pavement

9.6 Primary Treatment

Effective storm water management is often achieved from a management systems approach. A combination of BMPs can be used to meet the water quality treatment requirements.

9.7 Specific Practices

The principles and practices provided by the State in Rule 13 (327 IAC 15-13) and in Rule 5 (327 IAC 15-5) are to be followed in the development of all water quality treatment options. Rule 13 (327 IAC 15-13) and Rule 5 (327 IAC 15-5) do not give specific requirements for use of various practices leaving that to the localities. The designer and operator shall rely on the EPA's Stormwater Phase II Menu of Best Management Practices (BMPs) as well as the Indiana BMP manual (as it is developed and updated), currently under development by the State of Indiana, for detailed design, construction and maintenance criteria for water quality treatment. Stormwater quality treatment systems will be approved on a case-by-case basis by the OCE. As the OCE develops a

more specific and comprehensive menu of stormwater treatment BMPs that information will be included in updated versions of this Manual

9.8 Regional Stormwater Management Plans

Applicants are directed to communicate with OCE prior to submitting an application for stormwater management plan approval to determine if a Regional Stormwater Management Plan has been developed for the applicable watershed. If such a plan is in existence, the applicant must provide stormwater management water quality treatment on-site in accordance with the provisions of the regional plan, and other management provisions as specified by the OCE.

10.0 Soil Erosion and Sedimentation Control

The purpose of this section is to control soil erosion, sediment damages, and related environmental damage by requiring adequate provisions for surface water retention and drainage and for the protection of exposed soil surfaces in order to promote the safety, public health, convenience, and general welfare of the citizens of City of Martinsville.

The volume and rate of any stormwater discharges allowed under this Manual must be managed to prevent the physical degradation of receiving waters, such as by streambank scour and erosion. The following requirements are necessary for soil erosion and sedimentation control:

(1) All persons who cause, in whole or in part, any earth change to occur shall provide soil erosion and sedimentation control so as to adequately prevent soils from being eroded and discharged or deposited onto adjacent properties or into a stormwater drainage system, a public street or right of way, wetland, creek, stream, water body, or floodplain.

(2) All development shall be in accordance with all applicable federal, state and local ordinances, rules and regulations.

(3) During any earth change, which exposes soil to an increased risk of erosion or sediment track-out, the property owner and other persons causing or participating in the earth change shall do the following:

(a) Comply with the stormwater management standards of this Manual.

(b) Obtain and comply with the terms of a soil erosion and sedimentation control permit if required by law.

(c) Prevent damage to any public utilities or services within the limits of grading and within any routes of travel or areas of work of construction equipment.

(d) Prevent damage to or impairment of any water body on or near the location of the earth change or affected thereby.

(e) Prevent damage to adjacent or nearby land.

(f) Apply for all required approvals or permits prior to the commencement of work.

(g) Proceed with the proposed work only in accordance with the approved plans and in compliance with this manual.

(h) Maintain all required soil erosion and sedimentation control measures, including but not limited to, measures required for compliance with the terms of this manual.

(i) Promptly remove all soil, sediment, debris, or other materials applied, dumped, tracked, or otherwise deposited on any lands, public streets, sidewalks, or other public ways or facilities, including catch basins, storm sewers, ditches, drainage swales, or water bodies. Removal of all such soil, sediment, debris or other materials within twenty-four (24) hours shall be considered prima facie compliance with this requirement, unless such materials present an immediate hazard to public health and safety.

(j) Refrain from grading lands at locations near or adjoining lands, public streets, sidewalks, alleys, or other public or private property without providing adequate support or other measures so as to protect such other lands, streets, sidewalks or other property from settling, cracking or sustaining other damage.

(k) Request and obtain inspection of soil erosion and sedimentation control facilities, by the OCE or their designee. Qualified personnel provided by the owner or operator shall inspect construction sites for which the OCE or their designee will not perform inspections. The qualified person shall inspect all disturbed areas which are not finally stabilized, storage areas of possible polluting agents such as paints, solvents, fuels, fertilizers and pesticides that are exposed to precipitation, structural control measures and locations of vehicle entrance and exit at least once every seven (7) calendar days and, for sites which disturb greater than five (5) acres, within 24 hours of the end of a storm that is 0.5 inches or greater. Inspections will continue until all disturbed areas are stabilized, structural controls are removed or converted to

stormwater management facilities, and stored materials are removed from exposure. Corrective action will be taken for all noted deficiencies. Such actions will be initiated within 24 hours of inspection notification.

(l) Follow the minimum design standards of this manual to protect properties and receiving waterways downstream of any land development project from erosion and damage due to increases in volume, velocity and frequency of peak flow rate of stormwater runoff.

(4) Land alterations, including regrading, which strip the land of vegetations, shall be accomplished in a manner, which minimizes erosion or the addition of sediments to natural and manmade drainageways. This will reduce the impact on adjacent properties and water quality of receiving waters. Whenever feasible, natural vegetation shall be retained, protected and supplemented.

(5) Cut and fill operations shall be kept to a minimum to ensure conformity with existing topography to reduce the potential erosion. Applicants shall follow the procedures and comply with the requirements of Rule 5 (327 IAC 15-5), regarding sediment and erosion control during construction.

(6) Sediment controls shall be installed whenever runoff from disturbed portions of the parcel will leave the parcel. Sediment controls may include vegetative buffer strips, filter barriers, sediment basins, debris basins or silt traps. Vegetative buffer strips shall only be used where runoff is dispersed and exits the parcel as sheet flow. Filter barriers shall not be used in areas of concentrated flow. Synthetic filter fences are more effective than straw bales and shall be used in series. Straw bales shall also be anchored with stakes and grounded to reduce unfiltered underflow by burying the lower 3 inches of each bale.

(7) Any flow from a disturbed parcel shall pass through a vegetative filter barrier or sediment basin before entering a storm drain inlet. Existing inlets or those being constructed in a disturbed area shall have all flow diverted away from them, be plugged or protected by a filter. Downstream development parcels shall be protected from increases in volume, velocity, and sediment load or peak flow rates.

(8) The duration of time, which an area remains exposed, shall be kept to a practical minimum and the area stabilized as quickly as possible. Temporary vegetation or mulch shall be used to protect exposed areas during development. For areas subject to daily disturbance, a weighted cover of impermeable material may be used, if approved by the OCE.

(9) Stockpiles shall be located outside of drainageways and the 100-year floodplain if possible. It may be necessary to divert drainage around a stockpile that must be located in a drainageway.

(10) Soil stabilization shall be maintained in an effective condition throughout construction until permanent vegetation stabilization is achieved.

(11) Permanent vegetation or structural erosion control devices shall be installed as soon as practical after as-built topographic conditions are finalized.

(12) Permanent stabilization requires permanent structures, pavement or vegetation sufficiently mature to withstand annual climate cycle or permanent mulch.

10.1 Plan Requirements

If the owner or operator is required to prepare an erosion and sedimentation control plan (ESCP) under Rule 5 (327 IAC 15-5) and/or Rule 6 (327 IAC 15-6) and/or Rule 13 (327 IAC 15-13), all applicable state and federal permits or notices for land disturbing activities shall be obtained or filed prior to commencement of land disturbing activities. All applicable state or federal standards shall be adhered to when conducting land-disturbing activities. For land disturbances within the MS4 area that are greater than or equal to one (1) acre, or disturbances of less than one (1) acre of land that are part of a larger common plan of development or sale if the larger common plan will ultimately disturb one (1) or more acres of land, copies of all applications, letters of intent submittals, plans and other erosion and sediment control related information shall be submitted to the OCE. The construction project site owner shall also submit a copy of the application directly to the IDEM.

If an ESCP is prepared, it shall be prepared under the supervision of, and certified by a registered professional and shall include at a minimum the requirements as specified in Rule 5 (327 15-5).

10.2 General Criteria for Erosion and Sediment Control Practices

(1) Perimeter Control and Sediment Trapping – Perimeter control and other sediment trapping measures shall be installed as specified on the approved plan, including: construction access drives, straw bale dams and fabric fencing, temporary sediment traps, sediment basins, and diversions. Also storm drain system inlet shall be protected from sedimentation.

(2) Vegetative Control – Disturbed areas, which are at finish grade, shall be permanently seeded within seven (7) days. At the

discretion of the OCE, barren areas to be rough graded and left undisturbed for more than thirty (30) days shall be established with temporary vegetation; and dormant seeding will be required during seasonal periods (October through February) for those barren areas to be left undisturbed for one-hundred and twenty (120) days or longer.

(3) Slope Protection – Slope protection shall be provided by use of temporary and permanent diversion dikes, vegetative cover, and slope drains. Concentrated stormwater flows shall not be allowed to flow down cut or fill slopes without proper slope stabilization.

(4) Protection of Outlet Channel – Concentrated stormwater runoff leaving a development site shall be outlet to an open channel, storm sewer pipe inlet or culvert, which is capable of receiving this discharge. Runoff velocities shall be controlled during all storm events, up to the 100-year return interval storm, so that the peak runoff velocity during and after the completion of the land alteration approximates existing conditions.

(5) Waste, Debris, and Pollution Elimination – Appropriate measures shall be taken to minimize or eliminate wastes and unused building materials and all pollutants from being carried from the site by runoff. Proper storage, handling and use of al potentially polluting substances shall be employed.

(6) Roadways – Public and private roadways shall be kept clear of accumulated sediment. Bulk clearing of accumulated sediment shall not include flushing the area with water.

10.3 Specific Practices

The principles and practices provided by the State in Rule 5 (327 15-5) are to be followed in the development of all ESCPs. Rule 5 (327 15-5) does not give specific requirements for use of various practices leaving that to the localities. The designer and operation shall rely on the Indiana Handbook for Erosion Control in Developing Areas (HECDA) or an approved equivalent for detailed design, construction and maintenance criteria for all erosion control practices. The manual can be obtained from:

Urban Conservation Program
Division of Soil Conservation
Indiana Department of Natural Resources
402 West Washington Street, Rm W-265
Indianapolis, Indiana 46204-2748
317-232-4180

11.0 Deviation from Approved Plans

Any significant deviation or change in the detailed plans and specifications after granting of the Stormwater Management Plan Approval (SWMPA) shall be filed in duplicate with and approved by the OCE prior to the time land alteration involving the change occurs. Copies thereof, if approved, shall be attached to the original plans and specifications.

12.0 Enforcement

See Section 12 (Enforcement) of the City of Martinsville Stormwater Management and Erosion Control Ordinance for actions that the City of Martinsville may apply in the case of non-compliance or violation of the requirements of the Stormwater Management and Erosion Control Ordinance and this design manual, including additional fees, revocation of permits, monetary penalties, stop work orders, abatement orders and judicial injunction.

Appendix I

STORMWATER CHARTS, GRAPHS, TABLES and FORMS

TYPE OF SURFACE	RUNOFF COEFFICIENT
Non-Urban Areas	
Bare Earth	0.55
Steep Grassed Areas (slope 2:1)	0.60
Turf Meadows	0.25
Forested Areas	0.20
Cultivated Fields	0.30
Urban Areas	
All Watertight Roof Surfaces	0.90
Pavement (concrete, asphalt)	0.85
Gravel	0.85
Impervious Soils (Heavy)	0.55
Impervious Soils (with turf)	0.45
Slightly Pervious Soil	0.25
Slightly Pervious Soil (with turf)	0.20
Moderately Pervious Soil	0.15
Moderately Pervious Soil (with turf)	0.10
Business, Commercial & Industrial	0.85
Apartments & Townhouses	0.70
Schools & Churches	0.55
Single Family Lots < 10,000 ft^2	0.45
Lots < 12,000 ft^2	0.45
Lots < 17,000 ft^2	0.40
Lots > ½ Acre	0.35
Park, Cemetery or Unimproved Area	0.30

210-VI-TR-55, Second Edition, June 1986

Table 1.1.1 (TR-55 Table 3-1) : Runoff Coefficient's for use in the Rational Method calculations for Pipe, Channel and Detention Design

Worksheet 1.2.1 – TR-55 Time of Concentration (T_c) or Travel Time (T_t)

Project: _____ Designed By: _____
Date: _____

Location: _____ Checked By: _____
Date: _____

Check one: Present ☐ Developed ☐

Check one: T_c ☐ T_t ☐ through subarea: _____

NOTES: Space for as many as two segments per flow type can be used for each worksheet. Include a map, schematic, or description of flow segments.

Sheet Flow (Applicable to T_c only)	Segment ID				
1. Surface description (Table 3-1)					
2. Manning's roughness coeff., n (Table 3-1)					
3. Flow length, L (total L ≤ 300 ft) ..... ft					
4. Two-year 24-hour rainfall, ... in					
5. Land slope, s ..... ft/ft					
6. $T_t = \frac{0.007\,(nL)^{0.8}}{P_2^{0.5}\,s^{0.4}}$ Compute T_t ..... hr		+		=	

Shallow Concentrated Flow	Segment ID				
7. Surface description (paved or unpaved)					
8. Flow length, L ..... ft					
9. Watercourse slope, s ..... ft/ft					
10. Average velocity, V (Figure 3-1) ..... ft/s					
11. $T_t = \frac{L}{3600\,V}$ Compute T_t ..... hr		+		=	

Channel Flow	Segment ID				
12. Cross sectional flow area, a ..... ft^2					
13. Wetted perimeter, P_w ..... ft					
14. Hydraulic radius, $r = \frac{a}{P_w}$ Compute r ..... ft					
15. Channel Slope, s ..... ft/ft					
16. Manning's Roughness Coeff., n					
17. $V = \frac{1.49\,r^{2/3}\,s^{1/2}}{n}$ Compute V ..... ft/s					
18. Flow length, L ..... ft					
19. $T_t = \frac{L}{3600\,V}$ Compute T_t ..... hr		+		=	

20. Watershed or subarea T_c or T_t (add T_t in steps 6, 11, and 19) … hr ☐

Worksheet 1.2.1: Time of Concentration or Travel Time Worksheet

SURFACE DESCRIPTION	n
Smooth Surfaces (concrete, asphalt, gravel, bare soil)	0.011
Fallow (no residue)	0.05
Cultivated Soils:	
Residue cover </= 20%	0.06
Residue cover > 20%	0.17
Grass:	
Short Grass Praire	0.15
Dense Grass	0.24
Bermuda Grass	0.41
Range (natural)	0.13
Woods:	
Light Underbrush	0.40
Dense Underbrush	0.80

210-VI-TR-55, Second Edition, June 1986

Table 1.2.2 (TR-55 Table 3-1): Roughness coefficient's (Manning's n) for sheet flow to be used in Time-of-Concentration calculations

Figure 3-1

Average velocities for estimating travel time for shallow concentrated flow

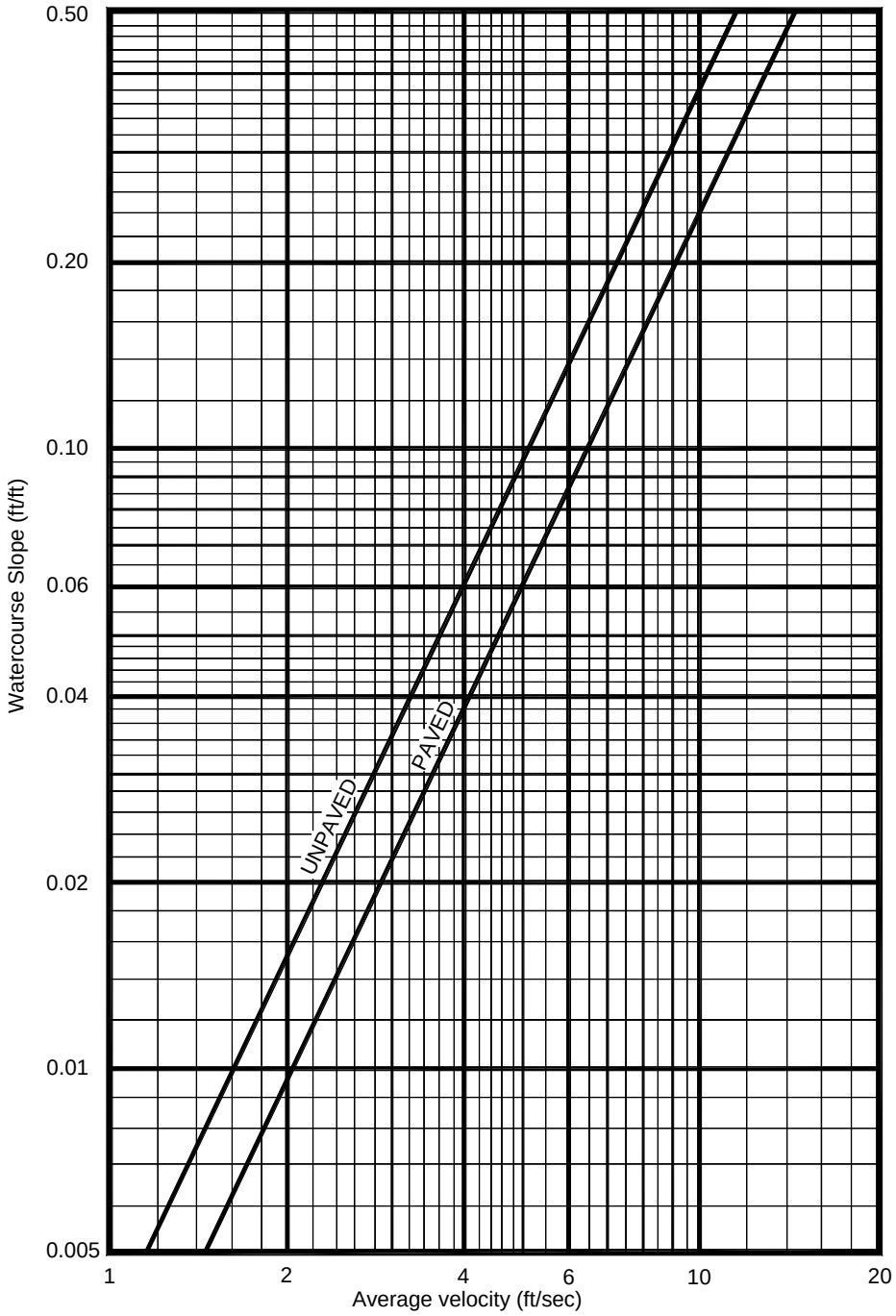

TR-55, Second Ed., June 1986

Figure 1.2.3 (TR-55 Figure 3-1): Average Velocities for Estimating Travel Time for Shallow Concentrated Flow.

Worksheet 1.3.1 – TR-55 Runoff Curve Number Determination

Project: _____ Designed By: _____ Date: _____

Location: _____ Checked By: _____ Date: _____

Check one: Present ☐ Developed ☐

1. Runoff curve number (CN)

Soil name and hydrologic group (Appendix A)	Cover description (Cover type, treatment, and hydrologic condition; percent impervious; unconnected /connected impervious area ratio)	Curve Number Source	Curve Number	Area ☐ acres ☐ mi^2 ☐ %	Product of CN x area
			Totals =		

$$\text{CN (weighted)} = \frac{\text{total product}}{\text{total area}} = _____ = _____ \text{ Use CN} =$$

Worksheet 1.3.1 (TR-55 Worksheet 2): Runoff Curve Number Worksheet

Table 1.3.2 (TR-55 Table 2-2a) Runoff Curve Numbers for Developed and Developing Urban Areas

Urban Areas - Average runoff condition and Ia = 0.2S

Fully Developed Urban Areas (Vegetation Established)

Cover Type	Hydrologic Condition		Average Percent Impervious (1)	Hydrologic Soil Group			
				A	B	C	D
Open space (lawns, parks, golf courses, cemeteries, etc.) (2)	Poor condition	grass cover < 50%		68	79	86	89
	Fair condition	grass cover 50-75%		49	69	79	84
	Good condition	grass cover > 75%		39	61	74	80
Impervious areas	Parking lots, roofs, driveways, etc. (excluding right-of-way) **(3)**			98	98	98	98
	Streets and roads	Paved: curbs and storm sewers (excluding right-of-way)		98	98	98	98
		Paved: open ditches (including right-of-way)		83	89	92	93
		Gravel (including right-of-way)		76	85	89	91
		Dirt (including right-of-way)		72	82	87	89
Urban districts	Commercial and business		85	89	92	94	95
	Industrial		72	81	88	91	93
Residential districts by average lot size	1/8 acre or less (town houses)		65	77	85	90	92
	1/4 acre		38	61	75	83	87
	1/3 acre		30	57	72	81	86
	1/2 acre		25	54	70	80	85
	1 acre		20	51	68	79	84
	2 acres		12	46	65	77	82

Developing Urban Areas

Cover Type	Hydrologic Condition	Average Percent Impervious	Hydrologic Soil Group			
			A	B	C	D
Newly graded areas	Pervious areas only, no vegetation **(4)**		77	86	91	94
Idle lands		See Table 1.3.3 - Runoff Curve Numbers for non-urban and undeveloped areas.				

(1) The average percent impervious area shown was used to develop the composite CN's. Other assumptions are as follows: impervious areas are directly connected to the drainage system, impervious areas have a CN of 98, and pervious areas are considered equivalent to open space in good hydrologic conditions.

(2) CN's shown are equivalent to those of pasture. Composite CN's may be computed for other combinations of open space cover type.

(3) All parking lots and driveways must be considered to have a paved hard surfaced. Crushed stone parking lots and driveways are considered impervious surfaces with a CN of 98.

(4) Composite CN's to use for the design of temporary measures during grading and construction should be computed based on the degree of development (impervious area percentage) and the CN's for the newly graded pervious areas.

Table 1.3.2 - Runoff Curve Numbers for Urban Areas

Table 1.3.3 (TR-55 Table 2-2b & 2-2c) **Runoff Curve Numbers for Non-urban and Undeveloped Areas**

Rural Areas - Antecedent moisture condition II and Ia = 0.2S

Land Use or Cover	Treatment or Practice (1)	Hydrologic Condition (2)	Hydrologic Soil Group			
			A	B	C	D
Fallow	Straight row	----------	77	86	91	94
Row crops	Straight row	Poor	72	81	88	91
		Good	67	78	85	89
	Contoured	Poor	70	79	84	88
		Good	65	75	82	86
	Contoured and terraced	Poor	66	74	80	82
		Good	62	71	78	81
Small grain	Straight row	Poor	65	76	84	88
		Good	63	75	83	87
	Contoured	Poor	63	74	82	85
		Good	61	73	81	84
	Contoured and terraced	Poor	61	72	79	82
		Good	59	70	78	81
Close-seeded legumes or rotation meadow	Straight row	Poor	66	77	85	89
		Good	58	72	81	85
	Contoured	Poor	64	75	83	85
		Good	55	69	78	83
	Contoured and terraced	Poor	63	73	80	83
		Good	51	67	76	80
Pasture, grassland, or range (3)	----------	Poor	68	79	86	89
		Fair	49	69	79	84
		Good	39	61	74	80
	Contoured	Poor	47	67	81	88
		Fair	25	59	75	83
		Good	6	35	70	79
Meadow - continuous grass, protected from grazing and generally mowed for hay	----------	Good	30	58	71	78
Brush - brush-weeds-grass mixture with brush the major element (4)	----------	Poor	48	67	77	83
		Fair	35	56	70	77
		Good	30 (5)	48	65	73
Woods - grass combinaton (orchard or tree farm) (6)	----------	Poor	57	73	82	86
		Fair	43	65	76	82
		Good	32	58	72	79
Woods (7)	----------	Poor	45	66	77	83
		Fair	36	60	73	79
		Good	30 (5)	55	70	77
Farmsteads	----------	----------	59	74	82	86
Rural roads - including right-of-way	Dirt	----------	72	82	87	89
	Hard surface	----------	74	84	90	92

(1) Crop residue cover applies only if residue is on at least 5% of the surface throughout the year.

(2) Hydraulic condition is based on combination factors that affect infiltration and runoff, including (a) density and canopy of vegetative areas, (b) amount of year-round cover, (c) amount of grass or closed-seeded legumes, (d) percent of residue cover on the land surface (good ≥ 20%), and (e) degree of surface roughness.

(3) ***Poor***: <50% ground cover or heavily grazed with no mulch. ***Fair***: 50 to 75% ground cover and not heavily grazed. ***Good***: >75% ground cover and lightly or only occasionally grazed.

(4) ***Poor***: <50% ground cover. ***Fair***: 50 to 75% ground cover. ***Good***: >75% ground cover.

(5) Actual curve number is less than 30; use CN=30 for runoff computations,

(6) CN's shown were computed for areas with 50% woods and 50% grass (pasture) cover. Other combinations of conditions may be computed from the CN's for woods and pasture.

(7) ***Poor***: Forest litter, small trees, and brush are destroyed by heavy grazing or regular burning. ***Fair***: Woods are grazed but not burned, and some forest litter covers the soil. ***Good***: Woods are protected from grazing, and litter and brush adequately cover the soil.

Table 1.3.3 - Runoff Curve Numbers for Non-Urban and Undeveloped Areas

Return Period	a	b	N	R^2
2	32.852	7	0.7780	0.99966
5	46.060	8	0.7859	0.99958
10	56.974	9	0.7953	0.99952
25	72.739	10	0.8115	0.99942
50	84.475	11	0.8147	0.99940
100	92.718	11	0.8145	0.99942

Table 1.4.1.1: IDF EQUATION VALUES

		Return Period – Rainfall Intensity (in/hr)					
Hours	**Minutes**	**2**	**5**	**10**	**25**	**50**	**100**
0.08	5	4.75	6.14	6.99	8.08	8.83	9.69
0.17	10	3.63	4.75	5.48	6.40	7.07	7.77
0.25	15	2.97	3.92	4.55	5.34	5.94	6.53
0.5	30	1.98	2.64	3.09	3.65	4.10	4.50
1	60	1.25	1.67	1.96	2.31	2.62	2.88
2	120	0.76	1.02	1.20	1.40	1.59	1.75
3	180	0.56	0.75	0.88	1.03	1.17	1.29
6	360	0.33	0.44	0.52	0.60	0.68	0.75
12	720	0.20	0.26	0.30	0.35	0.39	0.43
24	1440	0.11	0.15	0.17	0.20	0.22	0.25

Table 1.4.1.2: IDF Table

		Return Period – Rainfall Depth (in)					
Hours	**Minutes**	**2**	**5**	**10**	**25**	**50**	**100**
0.08	5	0.40	0.51	0.58	0.67	0.74	0.81
0.17	10	0.61	0.79	0.91	1.07	1.18	1.30
0.25	15	0.74	0.98	1.14	1.34	1.49	1.63
0.5	30	0.99	1.32	1.55	1.83	2.05	2.25
1	60	1.25	1.67	1.96	2.31	2.62	2.88
2	120	1.52	2.04	2.40	2.80	3.18	3.50
3	180	1.68	2.25	2.64	3.09	3.51	3.87
6	360	1.98	2.64	3.12	3.60	4.08	4.50
12	720	2.40	3.12	3.60	4.20	4.68	5.16
24	1440	2.64	3.60	4.08	4.80	5.28	6.00

Table 1.4.2.1: IDD Table

	Cumulative Storm Rainfall (percent) for Given Storm Type			
Cumulative Storm Time (Percent)	**First Quartile**	**Second Quartile**	**Third Quartile**	**Fourth Quartile**
5	16	3	3	2
10	33	8	6	5
15	43	12	9	8
20	52	16	12	10
25	60	22	15	13
30	66	29	19	16
35	71	39	23	19
40	75	51	27	22
45	79	62	32	25
50	82	70	38	28
55	84	76	45	32
60	86	81	57	35
65	88	85	70	39
70	90	88	79	45
75	92	91	85	51
80	94	93	89	59
85	96	95	92	72
90	97	97	95	84
95	98	98	97	92

(SOURCE: Rainfall Frequency Atlas of the Midwest by Huff and Angel)

Table 1.4.3.1: Median Time Distributions of Heavy Storm Rainfall at a Point

Pipe Material	**Manning's n**
Concrete Pipe	0.012
Concrete Boxes	0.012
Corrugated Metal Pipe or Pipe Arch	
2 2/3" x ½" Helical Corrugation	0.022
2 2/3" x ½" Annular Corrugation	0.022
15" to 36"	0.025
42" to 96"	0.024
3" x 1" Corrugation	0.027
5" x 1" Corrugation	0.025
Structural Plate Pipe or Pipe Arch	
6" x 2" Corrugation	0.033
9" x 2½" Corrugation	0.035
Spiral Ribbed Corrugated Metal Pipe	0.013
Smooth High Density Polyethylene (HDPE)	0.012
Smooth Lined Interior Polyvinyl Chloride (PVC)	0.012
Smooth Interior Corrugated HDPE	0.012
Ductile Iron Pipe	0.012

Table 1.5.1.1: Manning's "n" Values for Pipes

Storm Drain Computation Sheet

DATE_____ PROJECT_____ROUTE_____
COMPUTED BY:_____ CHECKED BY:_____ SHEET_____OF_____

Station		Length (ft)	Drainage Area (acres)		Runoff Coefficient C	A x C		Flow Time (min)										
From	To		Increment	Total		Increment	Total	To Upper End	In Section	Rainfall Intensity (in/hr)	Total Runoff Q (cfs)	Diameter of Pipe (in)	Slope of Pipe (ft/ft)	Flowing Full Velocity	Upstream Invert Elevation	Downstream Invert Elevation	Manhole Invert Drop	Depth of Cover

Worksheet 1.5.1.2 (INDOT Figure 36-12F): Storm Drain Computation Sheet

Hydraulic Grade Line Computation Sheet

DATE_____ PROJECT_____ROUTE_____
COMPUTED BY:_____ CHECKED BY:_____ SHEET_____OF_____

Station	TW	D_O	Q_O	L_O	V_O	$V_o^2/2g$	H_O	Sf_O	H_f	K_O	C_D	C_d	C_Q	C_P	C_B	K	$K(V_o^2/2g)$	EGL_O 2+7	EGL 10+18+19	HGL EGL-7	TOC ELEV
(1)	(2)	(3)	(4)	(5)	(6)	(7)	(8)	(9)	(10)	(11)	(12)	(13)	(14	15)	(16)	(17)	(18)	(19)	(20)	(21)	(22)

Worksheet 1.5.1.3 (INDOT Figure 36-13D): Hydraulic Grade line Computation Sheet

INLET COMPUTATION SHEET

DATE_____ PROJECT_____ROUTE_____
COMPUTED BY:_____ SHEET_____OF_____

Location		Gutter Discharge (Design Frequency _____)				Gutter Discharge (Allowable Spread _____)									Inlet Discharge			Remark
Inlet No.	Stat.	Drain Area "A" (acre)	Runoff Coefficient "C"	Time of Concentration "T_c" (min.)	Rainfall Intensity "i" (in/hr)	Flow "Q" (cfs)	Grade "S_o" (ft/ft)	Cross Slope "S_x" (ft/ft)	Prev. Runby (cfs)	Total Gutter Flow (cfs)	Depth "d" (ft)	Gutter Width "W" (ft)	Spread "T" (ft)	W/T	Inlet Type	Intercept "Q_i" (cfs)	Runby "Q_r" (cfs)	
1	2	3	4	5	6	7	8	9	10	11	12	13	14	15	16	17	18	19

Worksheet 1.5.2.1 (INDOT Figure 36-10K): Inlet Spacing and Gutter Spread Computation Sheet

Type of Gutter or Pavement	Manning's "n"
Concrete	0.012
Asphalt Pavement:	
Smooth Texture	0.013
Rough Texture	0.016
Concrete Gutter – Asphalt Pavement:	
Smooth	0.013
Rough	0.015
Concrete Pavement:	
Float Finish	0.014
Broom Finish	0.016
For Gutters with small slope, where sediment may Accumulate, increase the "n" values above by:	0.002

USDOT, FHWA, HDS-3 (1961)

Table 1.5.2.2: Roughness coefficient's (Manning's n) for Street and Pavement Gutters

Open Channel Surface Material		n
Concrete		0.012
Gravel Bottom with sides	- Concrete	0.020
	- Mortared Stone	0.023
	- Rip-Rap	
Natural Stream Channels:		
Clean, Straight Stream		0.030
Clean, Winding Stream		0.040
Winding with weeds and pools		0.050
With Heavy Brush and Timbers		0.100
Flood Plains:		
Pasture		0.035
Field Crops		0.040
Light Brush and Weeds		0.050
Dense Brush		0.070
Dense Trees		0.100

Chow, 1959

Table 1.5.3.1: Roughness coefficient's (Manning's n) for Open Channel Surfaces

Typical Maximum Velocities for Open Channel Linings

Open Channel Lining Material	Desirable Maximum Velocity (ft/s)
Concrete, Trowel Finish	15
Concrete, Broom or Float Finish	15
Rip-Rap	10
Gabions	10
New Earth (Uniform, Sodded, Clay)	3-5
Existing Earth (Fairly Uniform, With Some Weeds	3-5
Dense Weeds	3-5
Swale with Grass	3-5

Table 1.5.3.2: Desirable Maximum Velocities for Open Channel Linings

Appendix II

APPROVED TREES

Trees Approved for Planting Along Public Streets and Highways and in Locations Where Low Maintenance, Hardy Specimens with High Canopies are Required

Botanic Name	Common Name	Type	Height	Tree Category
Acre campestre	Hedge Maple	D	30'-40'	Ornamental
Acer Freemanii	Freeman Maple	D	50-60'	Shade
Acer rubrum	Red Maple	D	50-60'	Shade
Acer saccharum	Sugar Maple	D	50-70'	Shade
Carpinus betulas 'Fastigiata'	Upright European Hornbeam	D	30-40'	Ornamental
Carpinus caroliniana	American Hornbeam	D	25-30'	Ornamental
Celtis occidentalis	Hackberry	D	50-75'	Shade
Cercis Canadensis	Eastern Redbud	D	20-25'	Ornamental
Crataegus crus-galli	Cockspur Hawthorn	D	15-25'	Ornamental
Crataegus phaenopyrum	Washington Hawthorn	D	20-25'	Ornamental
Fraxinus americana	White Ash	D	45-65'	Shade
Fraxinus	*pennsylvanica* Green Ash	D	40-50'	Shade
Gingko biloba	Gingko	D	40-60'	Shade
Gleditzia tricanthos inermis	Thornless Honeylocust	D	40-45'	Shade
Koelreuteria paniculata	Golden Rain Tree	D	20-35'	Ornamental
Liquidamber sty	American Sweet Gum	D	40-60'	Shade
Malus hybrids	Flowering Crabapple	D	15-30'	Ornamental
Prunus 'Newport'	Newport Plum	D	15-20'	Ornamental
Prunus maackii Amur	Chokecherry	D	25-30'	Ornamental
Prunus virginiana	Chokecherry	D	20-25'	Ornamental
Pyrus calleryana	Ornamental Pear	D	20-25'	Ornamental
Quercus coccinea	Scarlet Oak	D	60-80'	Shade
Quercus palustris	Pin Oak	D	50-80'	Shade
Quercus phellos	Willow Oak	D	50-70'	Shade
Quercus robur	English Oak	D	50-70'	Shade
Quercus rubra	Red Oak	D	40-60'	Shade
Sorbus alnifolia	Korean Mountain Ash	D	20-30'	Ornamental
Sorbus "Aria"	White Beam Mountain Ash	D	25-40'	Ornamental
Tillia americana	American Linden	D	40-60'	Shade
Tillia cordata	Little-Leaf Linden	D	40-50'	Shade
Tillia tomentosa	Silver Linden	D	40-50'	Shade
Zelkova serrata 'Village Green'	Village Green Zelkova	D	40-60'	Shade

Trees Approved for Use Within the Interior of the Site

Botanic Name	Common Name	Type	Height	Tree Category
Acer ginalla Amur	Maple	D	15-20’	Ornamental
Acer palmatum	Japanese Maple	D	15-20’	Ornamental
Amelachier canadansis	Juneberry	D	30-35’	Ornamental
Amelachier gransifloria	Apple Serviceberry	D	25-30’	Ornamental
Amelchier laevis	Allegheny Serviceberry	D	25-30’	Ornamental
Betula nigra	River Birch	D	30-40’	Ornamental
Betula papyrifera	Paper Birch	D	30-40’	Ornamental
Cercidyphyllum japonicum	Katsura Tree	D	25-40’	Ornamental
Cornus kousa	Japanese Dogwood	D	20-25’	Ornamental
Cotinus coggyria	Smoke Tree	D	15-20’	Ornamental
Gymnocladus dioicus	Kentucky Coffee Tree	D	40-50’	Shade
Liriodendron tulipifera	Tulip Tree	D	60-80’	Shade
Magnolia loebneri	Magnolia	D	12-15’	Ornamental
Magnolia soulangiana	Saucer Magnolia	D	15-20’	Ornamental
Magnolia stellata	Star Magnolia	D	10-15’	Ornamental
Picea abies	Norway Spruce	E	50-60’	Evergreen
Picea glauca densata	Black Hills Spruce	E	50-60’	Evergreen
Picea pungens	Colorado Spruce	E	60-75’	Evergreen
Picea pungens ‘Glauca’ Colorada	Blue Spruce	E	60-75’	Evergreen
Pinus nigra	Austrian Pine	E	30-60’	Evergreen
Pinus ponderosa	Ponderosa Pine	E	40-50’	Evergreen
Pinus strobus	Eastern White Pine	E	50-100’	
Quercus alba	White Oak	D	60-80’	Shade
Quercus bicolor	Swamp White Oak	D	40-50’	Shade
Salix blanda	Wisconsin Weeping Willow	D	40-50’	Shade
Salix matsudana ‘Tortuosa’	Corkscrew Willow	D	25-30’	Ornamental
Tsuga Canadensis	Canada Hemlock	E	60-75’	Evergreen
Picea glauca conica	Dwarf Alberta Spruce	E	6-10’	
Prunus cistena	Cistena Plum	D	6-8’	
Prunus glandulosa	Dwarf Flowering Almond	D	4-6’	
Prunus triloba	Flowering Almond	D	8-10’	
Rhamnus frangula	Alder Buckthorn	D	12-15’	
Rhus aromatica	Fragment Sumac	D	4-6’	
Rhus glabra	Smooth Sumac	D	8-10’	
Rhus typhina	Staghorn Sumac	D	8-12’	
Salix caprea	French Pussy Willow	D	15-20’	
Sambucus canadensis	American Elderberry	D	6-8’	
Shepherdia	Silver Buffaloberry	D	5-8’	

Trees Approved for Use Within the Interior of the Site				
argentea				
Botanic Name	**Common Name**	**Type**	**Height**	**Tree Category**
Sorbaria sorbifolia Flase	Spiraea	D	6-8’	
Symphoricarpos alba	White Snowberry	D	5-6’	
Syringa chinensis	Chinese Lilac	D	6-8’	
Syringa hyacinthiflora Hybrids	Hybrid Canadian Lilac	D	8-12’	
Syringa vulgaris	Common Lilac	D	8-12’	
Syringa vulgaris Hybrids	Hybrid French Lilac	D	8-12’	
Taxus cuspidata ‘Capitata’	Upright Japanese Yew	E	10-25’	
Taxus ‘Hicksi’	Hick’s Yew	E	10-12’	
Thuja occidentalis Hybrids	American Arbovitae	E	4-15’	
Viburnum dentatum	Arrowwood Viburnum	D	10-15’	
Viburnum lantana	Wayfaring Tree	D	8-15’	
Viburnum lantago	Nannyberry	D	8-15’	
Viburnum opulus	European Cranberry Bush	D	10-12’	
Viburnum placatum tomentosum	Doublefile Viburnum	D	8-10’	
Viburnum prunifolium	Black Haw Viburnum	D	10-12’	
Viburnum rhytidophyllum	Leatherleaf Viburnum	D	6-15’	
Viburnum trilobum	American Cranberry Bush	D	8-12’	
Weigela florida	Flowering Weigela	D	4-5’	
Weigela vaniceki	Cardinal Shrub	D	4-5’	

Appendix III

STANDARD DETAILS

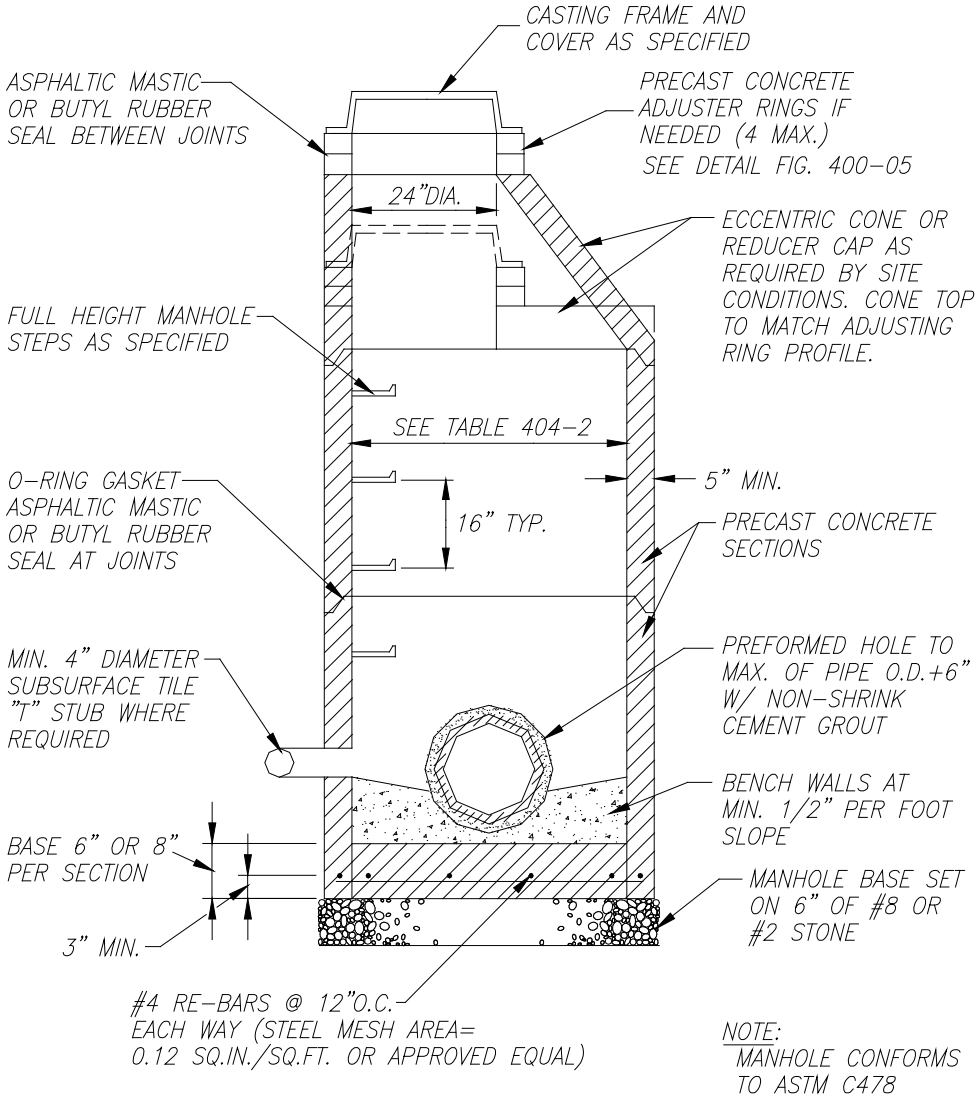

STANDARD MANHOLE FOR PIPE SIZES 12" thru 24"

NO SCALE

Figure 3-01

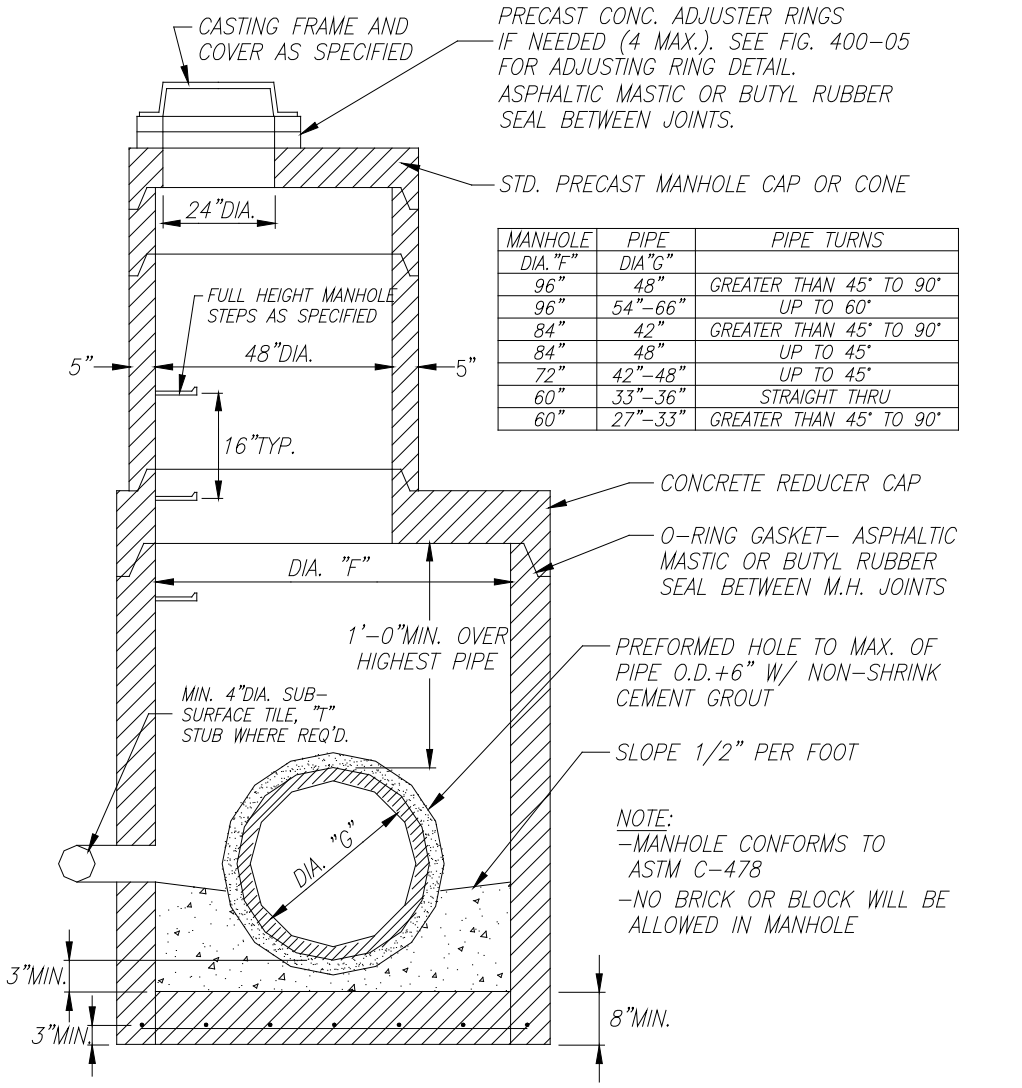

MANHOLE DIA."F"	PIPE DIA"G"	PIPE TURNS
96"	48"	GREATER THAN 45° TO 90°
96"	54"-66"	UP TO 60°
84"	42"	GREATER THAN 45° TO 90°
84"	48"	UP TO 45°
72"	42"-48"	UP TO 45°
60"	33"-36"	STRAIGHT THRU
60"	27"-33"	GREATER THAN 45° TO 90°

ONE COMPLETE UNIT OF PRECAST CONCRETE MANHOLE BASE & RISER OR APPROVED ALTERNATIVE. SEPARATE BASE & RISER SECTION IS OPTIONAL.

MANHOLE BASE, RISER & REDUCER CAP FOR PIPES 27" thru 48"

NO SCALE

Figure 3-02

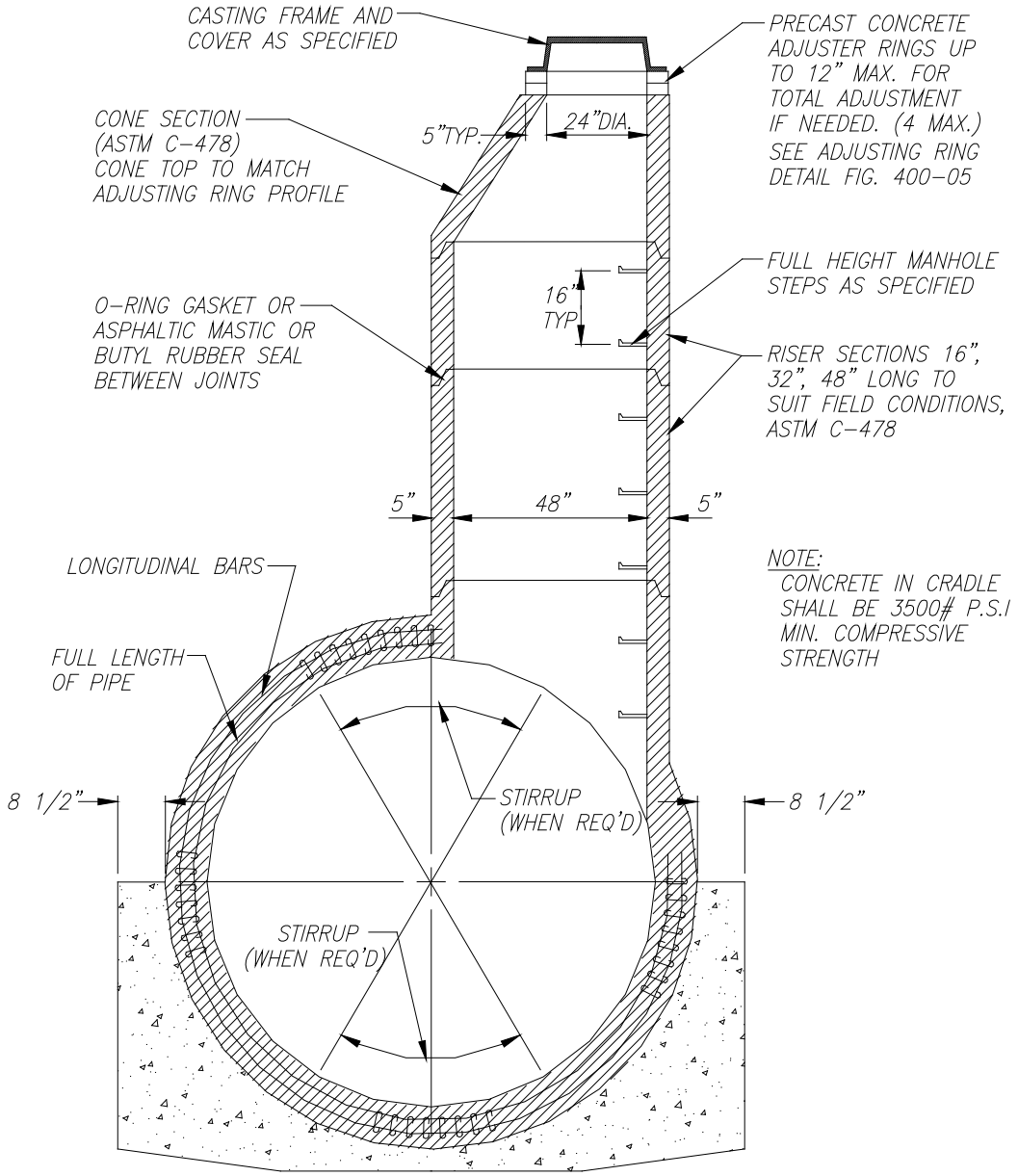

SPECIAL MANHOLE- 54" thru 144" SEWERS

MEETING CLASS III, IV OR V ASTM SPECS.

NO SCALE

Figure 3-03

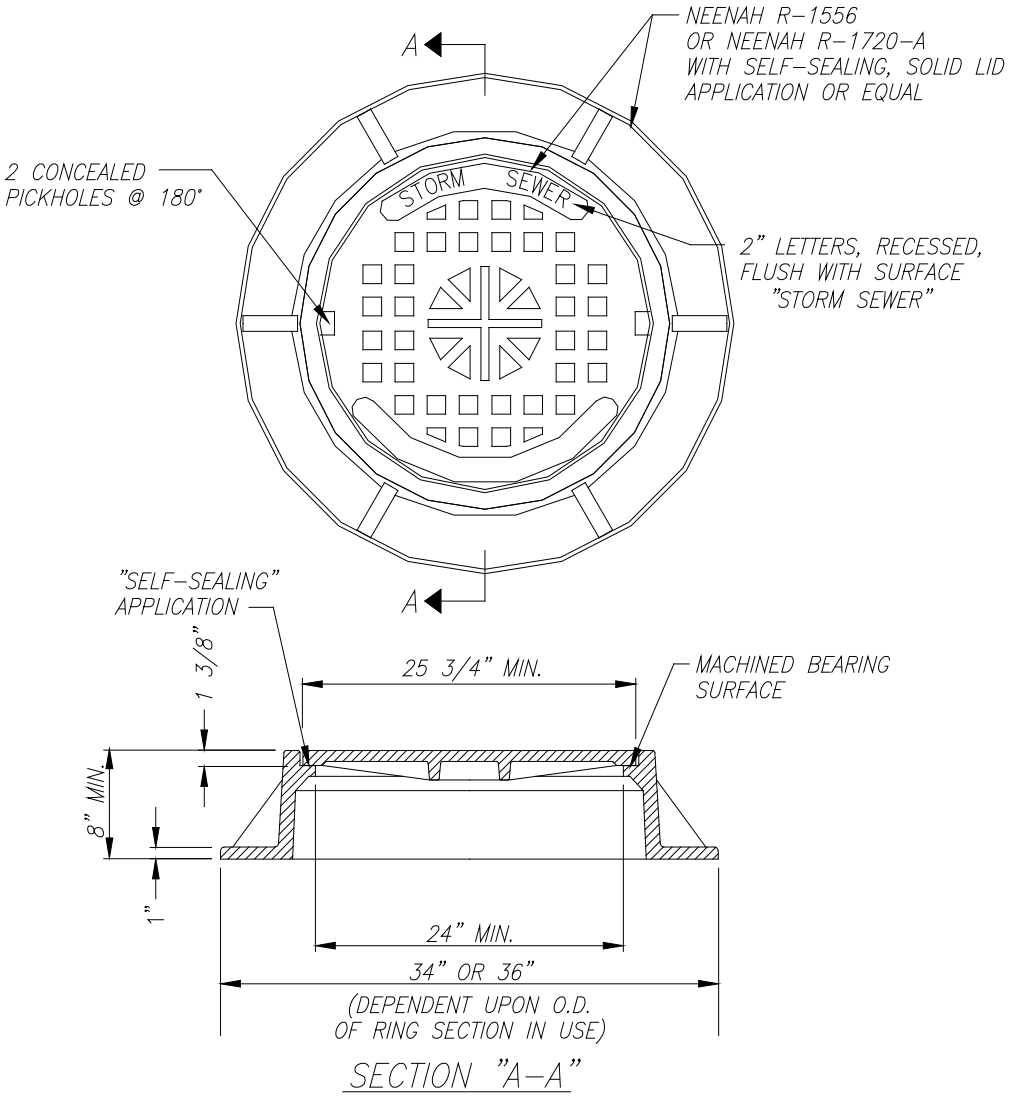

STORM SEWER MANHOLE FRAME & COVER

(FOR STANDARD MANHOLE)

NO SCALE

Figure 3-04

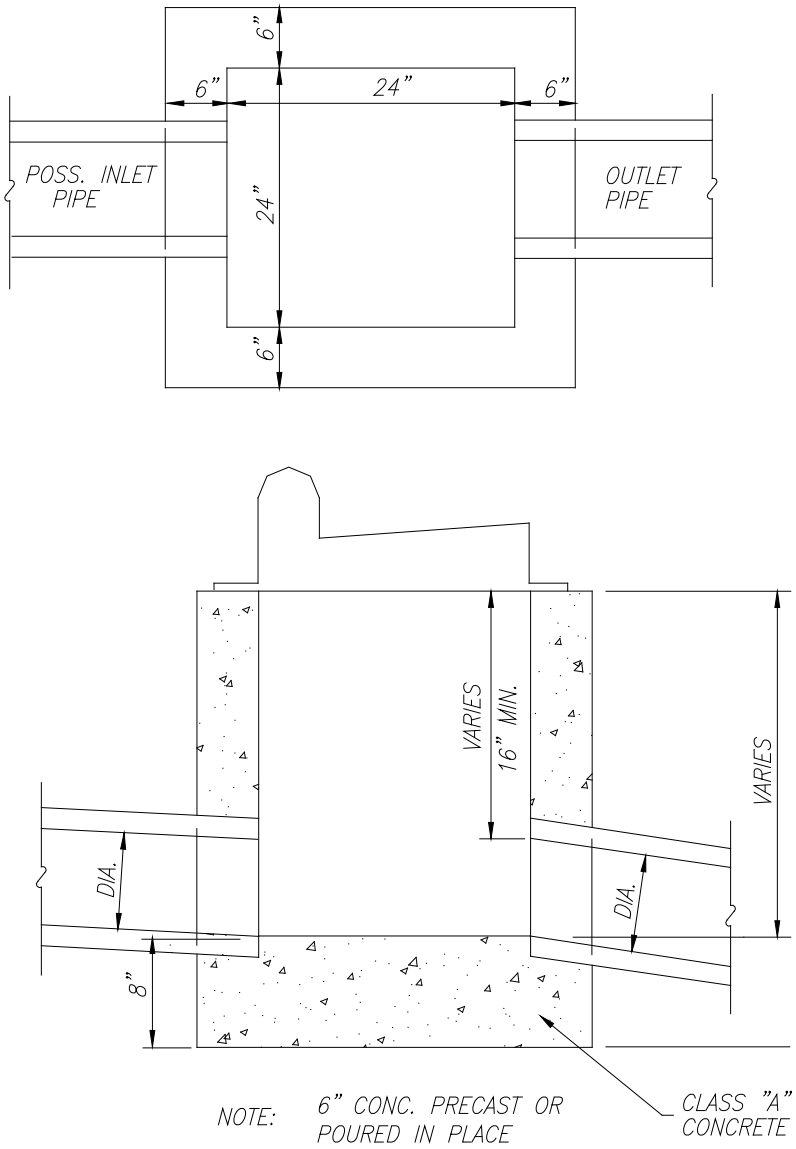

INLET TYPE "A" (MODIFIED)

(12" TO 18" PIPES)

NO SCALE

Figure 3-05

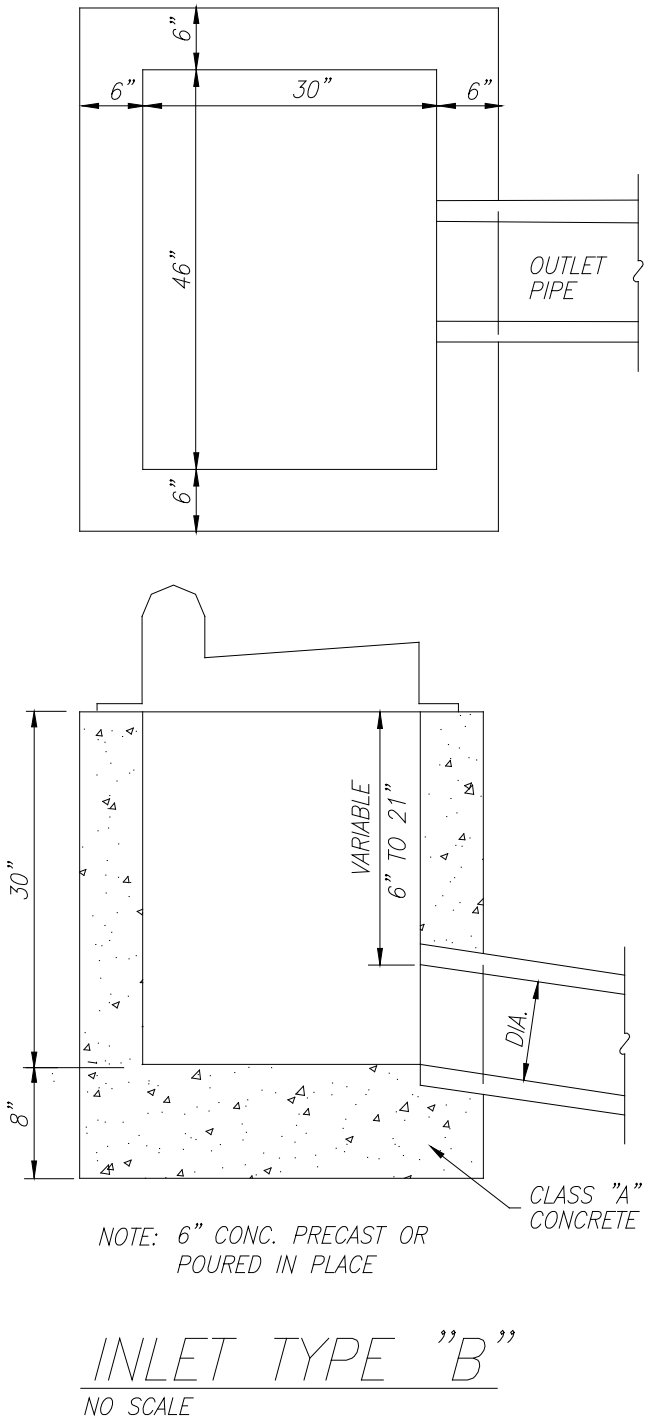
6"
6"
30"
6"
46"
OUTLET
PIPE
6"
30"
VARIABLE
6" TO 21"
DIA.
8"
CLASS "A"
CONCRETE
NOTE: 6" CONC. PRECAST OR
POURED IN PLACE
INLET TYPE "B"
NO SCALE

Figure 3-06

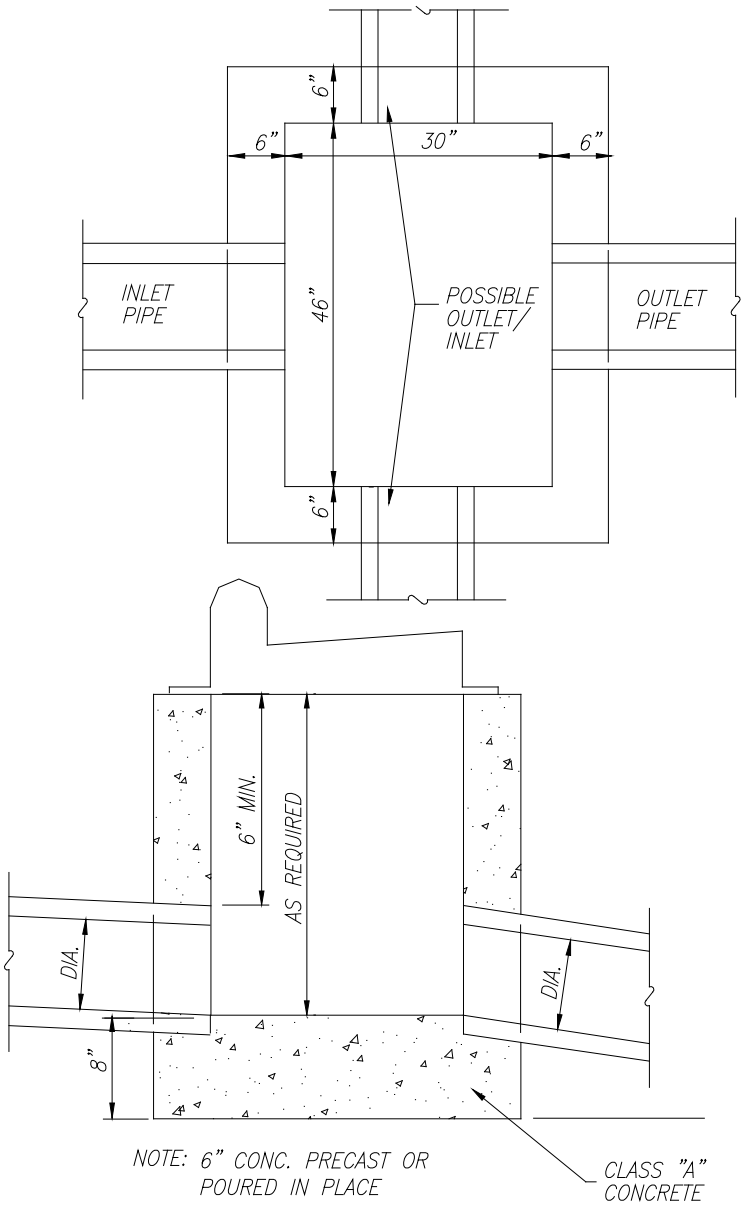

INLET TYPE "C"

NO SCALE

Figure 3-07

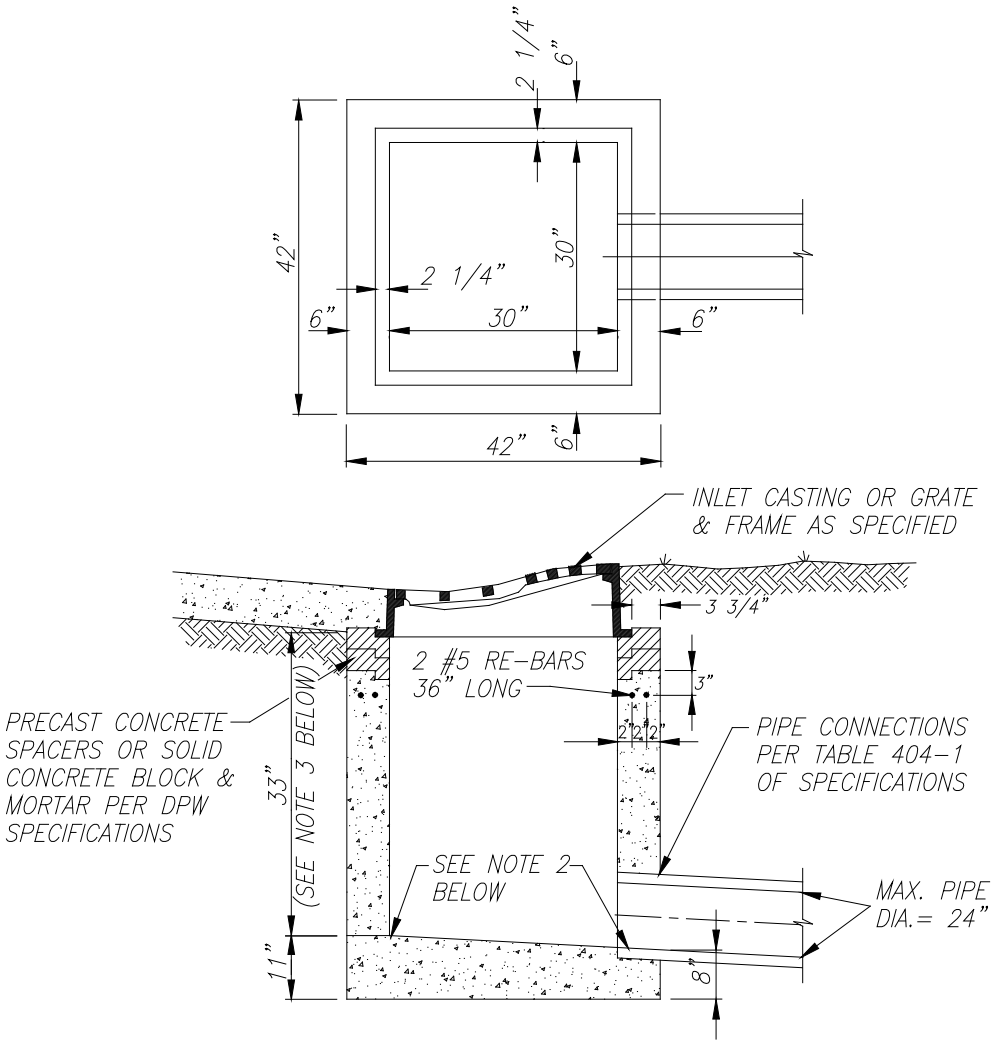

NOTES:

1. DIMENSIONS SHOWN IN CONFORMANCE WITH INDIANA DEPT.OF TRANSPORTATION (INDOT) SPECIFICATIONS.
2. POURED BENCHWALL AND PIPE CONNECTION VARY WITH BOX TYPE SPECIFIED.
3. HEIGHT DIMENSION MAY VARY AS REQUIRED BY SITE CONDITIONS.

PRECAST CONCRETE BOX INLET TYPE E
WITH ROLL CURB CASTING AND FRAME

NO SCALE

Figure 3-08

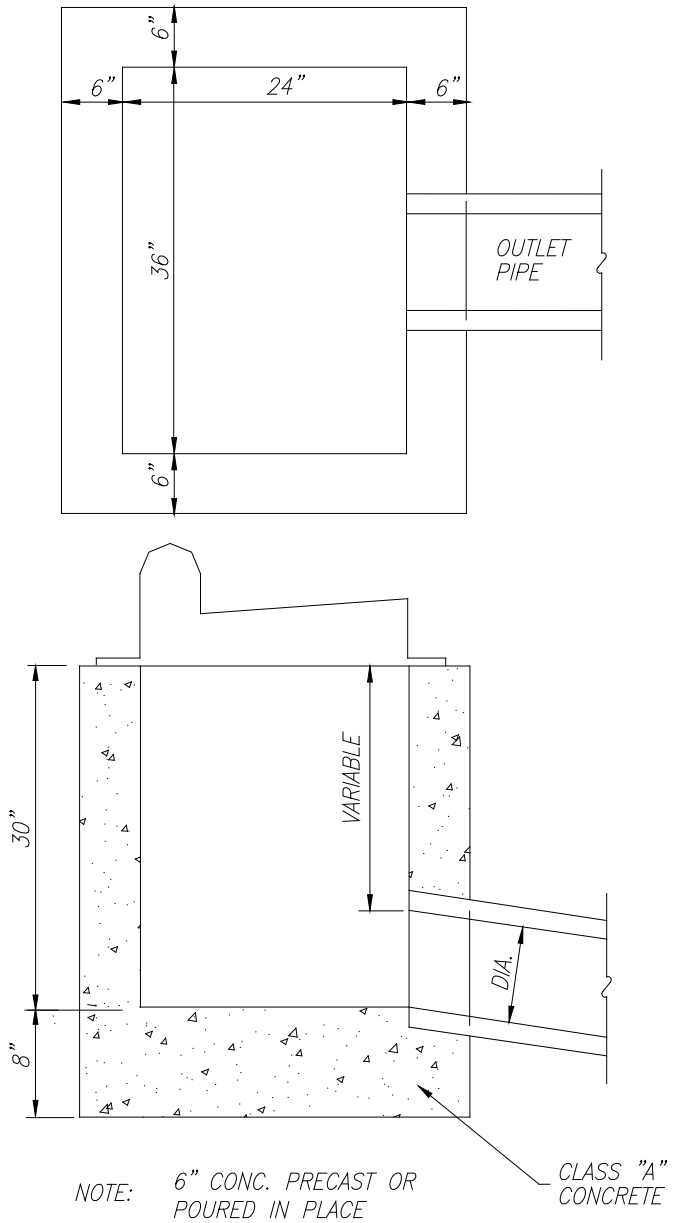

INLET TYPE "J"

NO SCALE

Figure 3-09

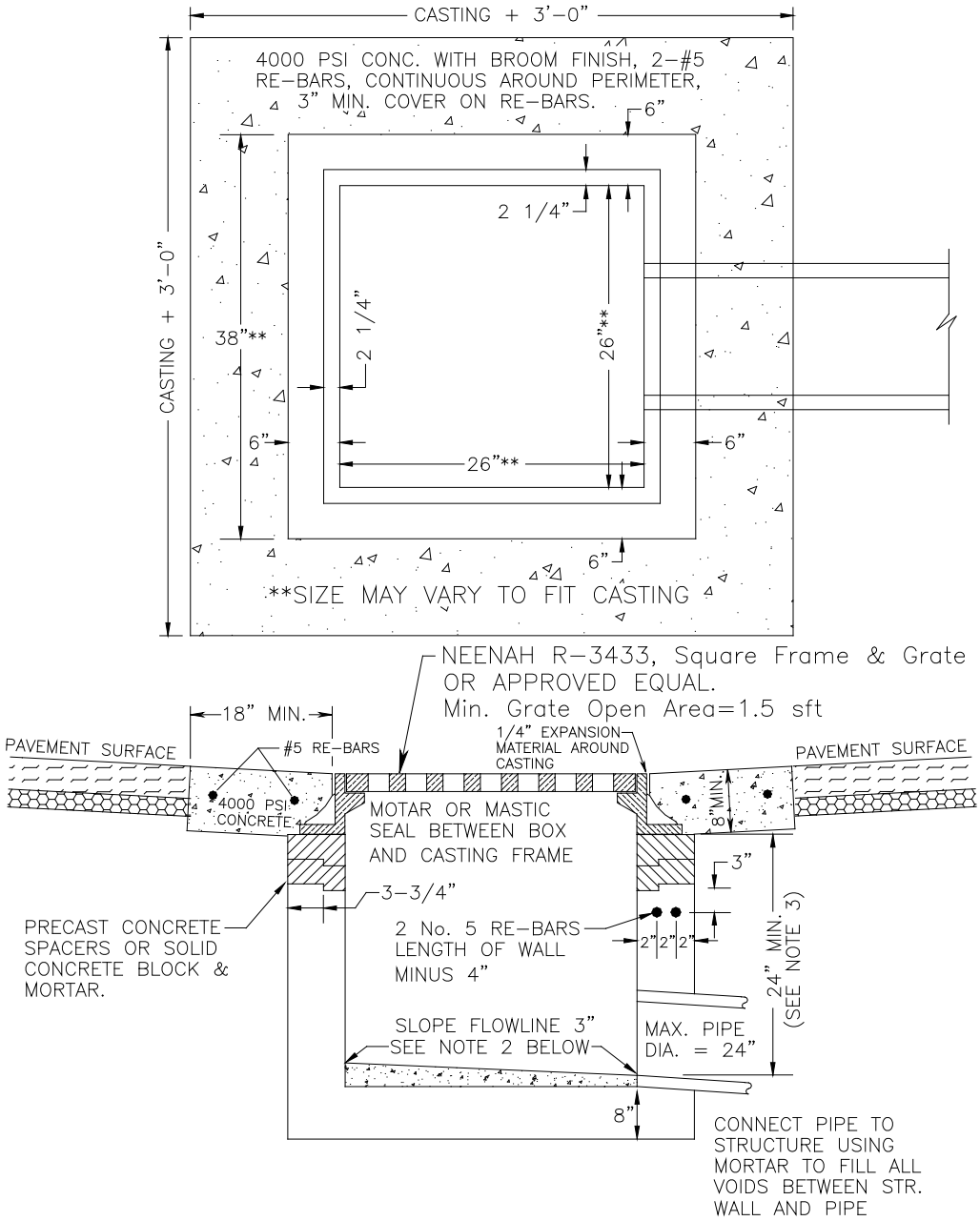

Precast Concrete Box for Pavement Inlet

NOTES:

1. ALL MATERIAL AND CONSTRUCTION TO CONFORMANCE WITH INDIANA DEPT. OF TRANSPORTATION (INDOT) SPECIFICATIONS.
2. POURED BENCHWALL AND SLOPE OF BOTTOM VARY DEPENDENT ON NUMBER OF PIPE CONNECTIONS.
3. HEIGHT WILL VARY. CHECK STRUCTURE DATA.

Figure 3-10

Figure 3-11

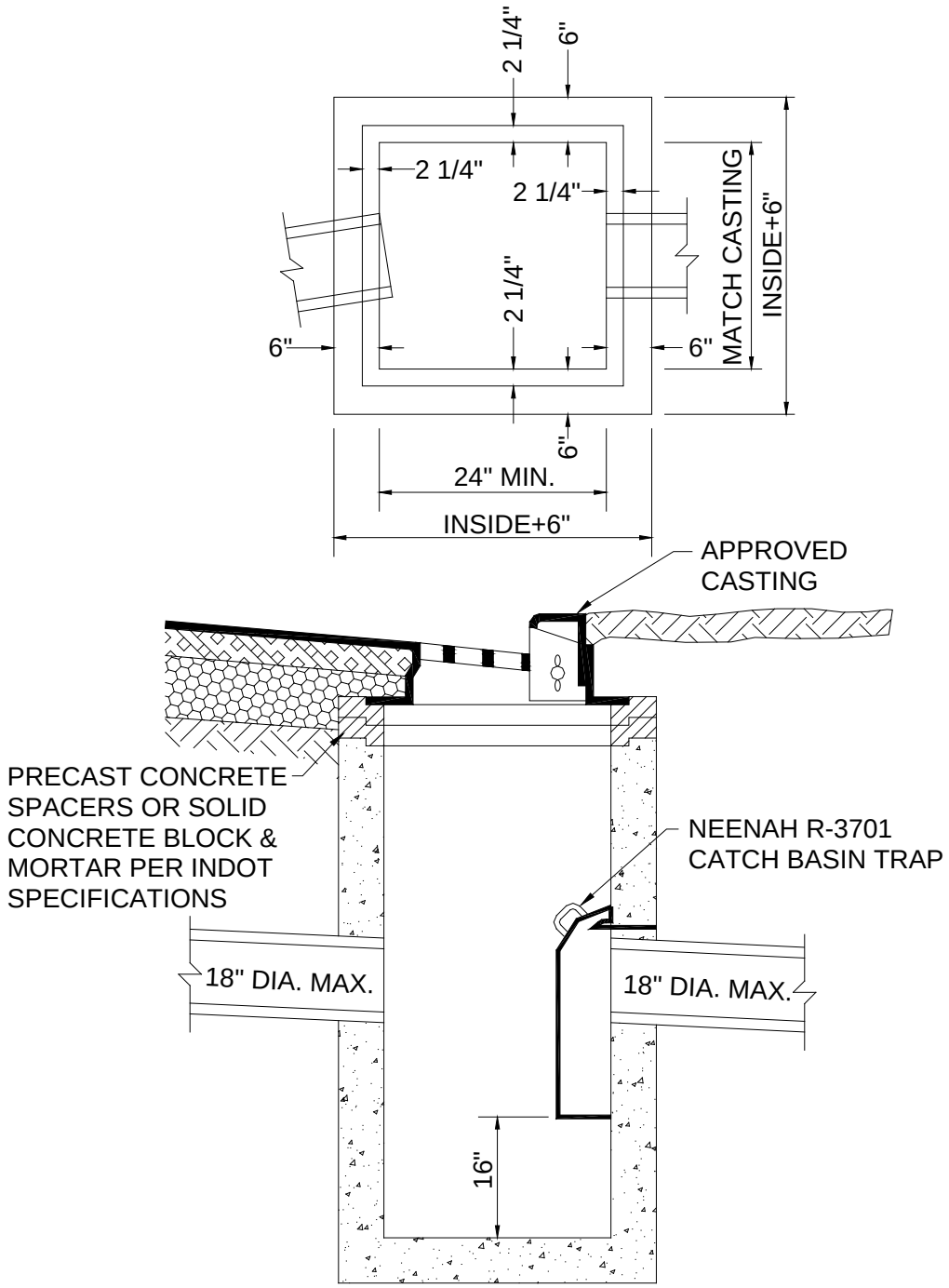

PRECAST CONCRETE CATCH BASIN

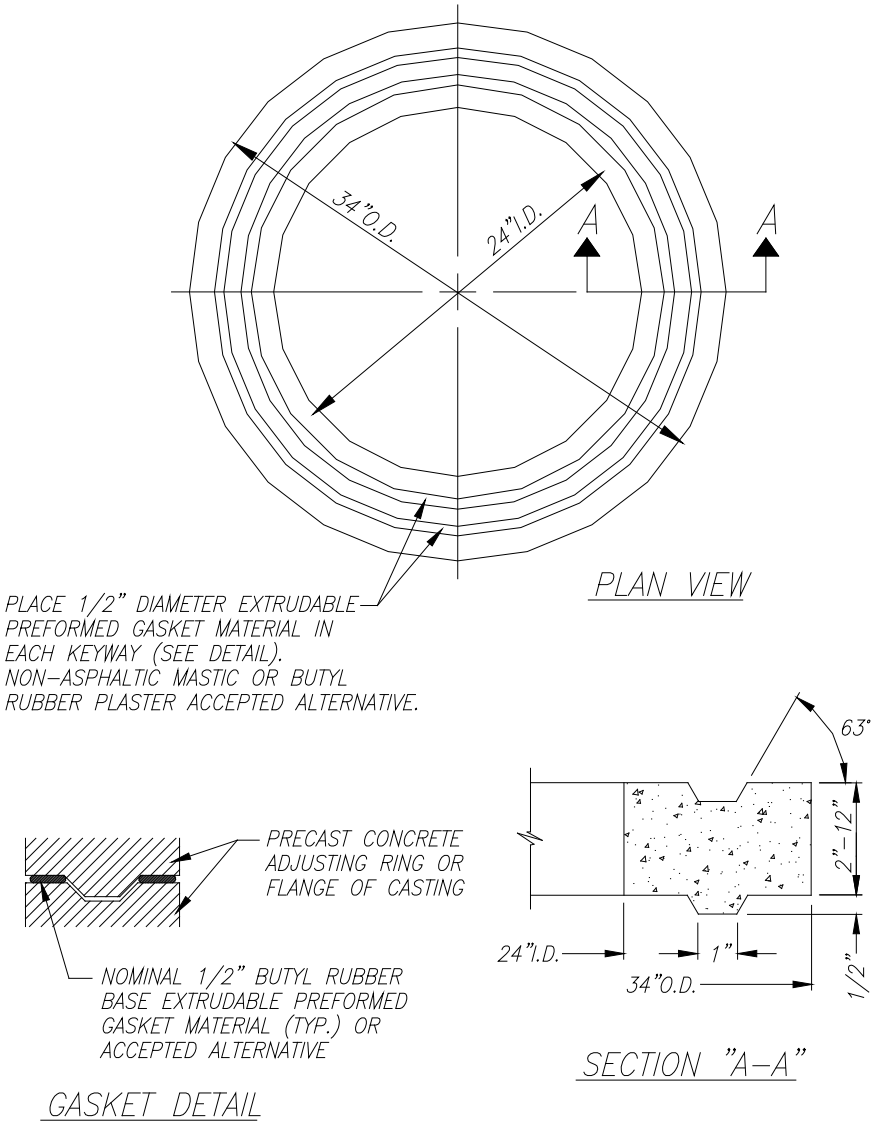

PRECAST CONCRETE ADJUSTING RING DETAIL

NO SCALE

Figure 3-12

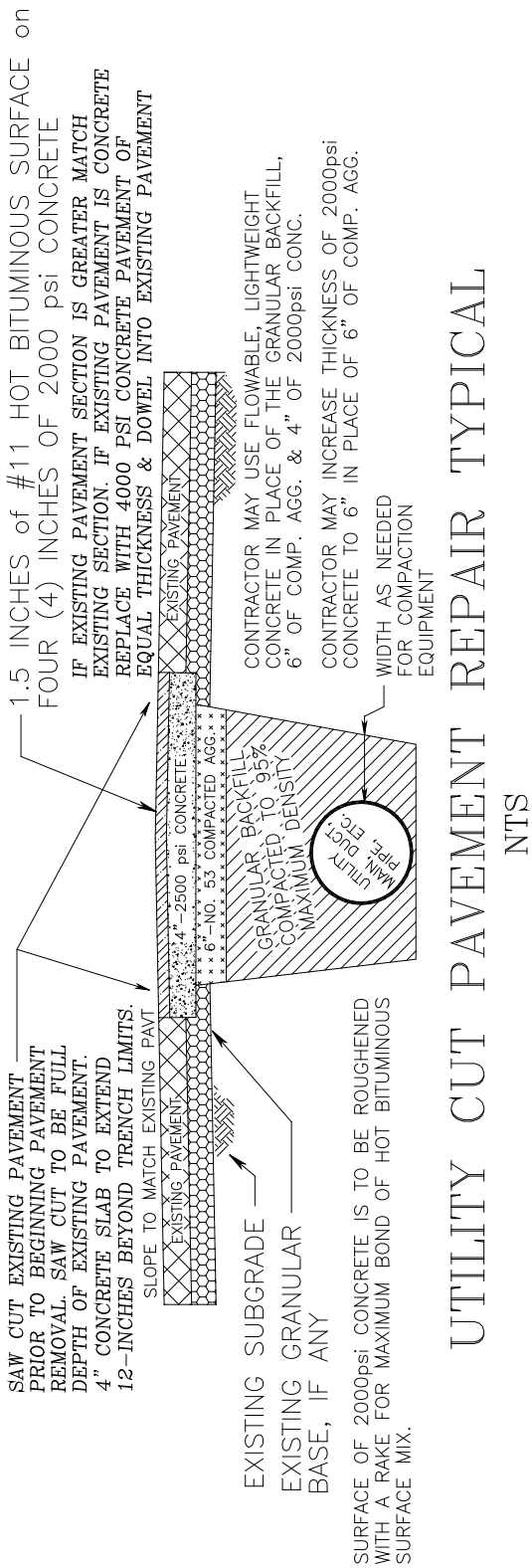
1.5 INCHES of #11 HOT BITUMINOUS SURFACE on FOUR (4) INCHES OF 2000 psi CONCRETE
IF EXISTING PAVEMENT SECTION IS GREATER MATCH EXISTING SECTION. IF EXISTING PAVEMENT IS CONCRETE REPLACE WITH 4000 PSI CONCRETE PAVEMENT OF EQUAL THICKNESS & DOWEL INTO EXISTING PAVEMENT
EXISTING PAVEMENT
CONTRACTOR MAY USE FLOWABLE, LIGHTWEIGHT CONCRETE IN PLACE OF THE GRANULAR BACKFILL, 6" OF COMP. AGG. & 4" OF 2000psi CONC.
CONTRACTOR MAY INCREASE THICKNESS OF 2000psi CONCRETE TO 6" IN PLACE OF 6" OF COMP. AGG.
WIDTH AS NEEDED FOR COMPACTION EQUIPMENT
4"-2500 psi CONCRETE
6"-NO. 53 COMPACTED AGG.
GRANULAR BACKFILL COMPACTED TO 95% MAXIMUM DENSITY
UTILITY MAIN, DUCT, PIPE, ETC.
SAW CUT EXISTING PAVEMENT PRIOR TO BEGINNING PAVEMENT REMOVAL. SAW CUT TO BE FULL DEPTH OF EXISTING PAVEMENT. 4" CONCRETE SLAB TO EXTEND 12-INCHES BEYOND TRENCH LIMITS.
SLOPE TO MATCH EXISTING PAVT
EXISTING PAVEMENT
EXISTING SUBGRADE
EXISTING GRANULAR BASE, IF ANY
SURFACE OF 2000psi CONCRETE IS TO BE ROUGHENED WITH A RAKE FOR MAXIMUM BOND OF HOT BITUMINOUS SURFACE MIX.
UTILITY CUT PAVEMENT REPAIR TYPICAL
NTS

Figure 3-13

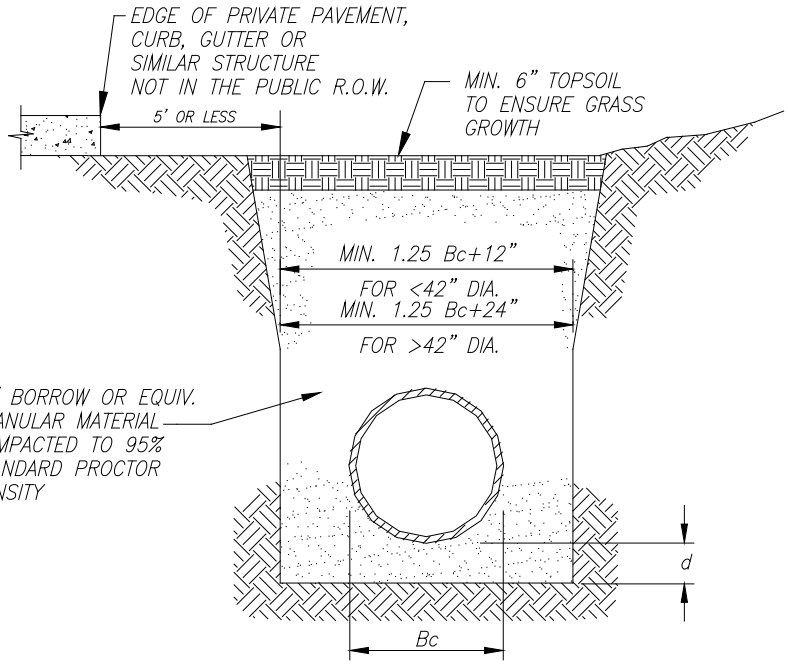

WITHIN 5' OF EDGE OF PRIVATE PAVEMENT

DEPTH OF BEDDING MATERIAL BELOW PIPE

D	(d) MIN.
27" & SMALLER	3"
30" TO 60"	4"
66" & LARGER	6"

NOTE:
ALL BEDDING & INITIAL BACKFILL SHALL BE INSTALLED IN 6" TO 12" BALANCED LIFTS

MIN. 9" CLEARANCE EACH SIDE OF PIPE FOR 42" DIA. AND LESS

MIN. 12" CLEARANCE EACH SIDE OF PIPE FOR LARGER THAN 42" DIA.

LEGEND

Bc = OUTSIDE DIAMETER
D = INSIDE DIAMETER
d = DEPTH OF BEDDING MATERIAL BELOW PIPE

CORRUGATED METAL PIPE (CMP) TRENCH DETAIL

WITHIN 5' OF EDGE OF PRIVATE PAVEMENT
PROHIBITED WITHIN PUBLIC R.O.W.

Figure 3-14

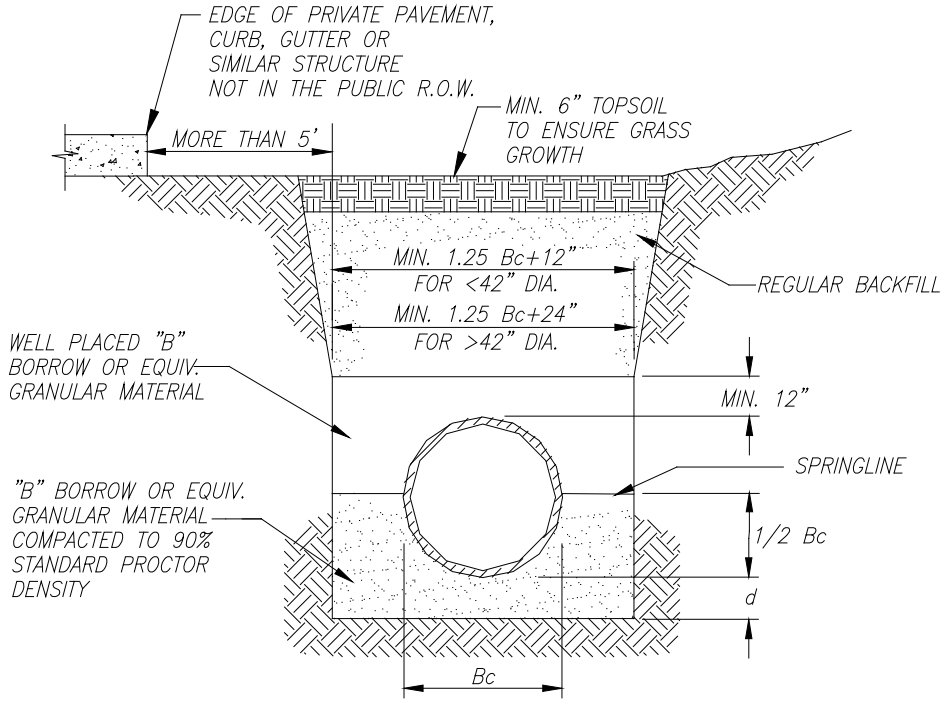

GREATER THAN 5' FROM EDGE OF PRIVATE PAVEMENT

DEPTH OF BEDDING MATERIAL BELOW PIPE

D	(d) MIN.
27" & SMALLER	3"
30" TO 60"	4"
66" & LARGER	6"

NOTE:
ALL BEDDING & INITIAL BACKFILL SHALL BE INSTALLED IN 6" TO 12" BALANCED LIFTS

MIN. 9" CLEARANCE EACH SIDE OF PIPE FOR 42" DIA. AND LESS

MIN. 12" CLEARANCE EACH SIDE OF PIPE FOR LARGER THAN 42" DIA.

LEGEND

Bc = OUTSIDE DIAMETER
D = INSIDE DIAMETER
d = DEPTH OF BEDDING MATERIAL BELOW PIPE

CORRUGATED METAL PIPE (CMP) TRENCH DETAIL

GREATER THAN 5' FROM EDGE OF PRIVATE PAVEMENT PROHIBITED IN PUBLIC R.O.W.

NO SCALE

Figure 3-14A

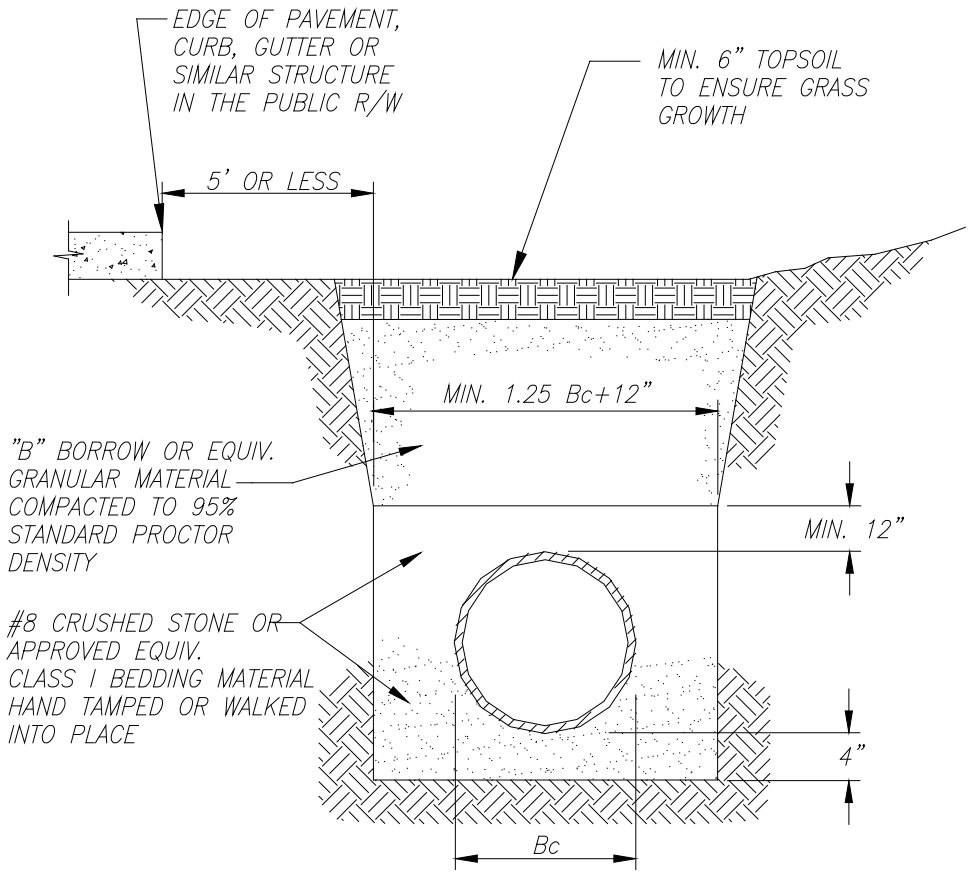

WITHIN 5" OF EDGE OF PAVEMENT

NOTE:
ALL BEDDING & INITIAL BACKFILL SHALL BE INSTALLED IN 6" TO 12" BALANCED LIFTS

A MINIMUM 9" CLEARANCE SHALL BE PROVIDED ON EACH SIDE OF THE INSTALLED PIPE

LEGEND

Bc = OUTSIDE DIAMETER
D = INSIDE DIAMETER
d = DEPTH OF BEDDING MATERIAL BELOW PIPE

PLASTIC PIPE (PVC & HDPE) TRENCH DETAIL

WITHIN 5' OF EDGE OF PAVEMENT

NO SCALE

Figure 3-15

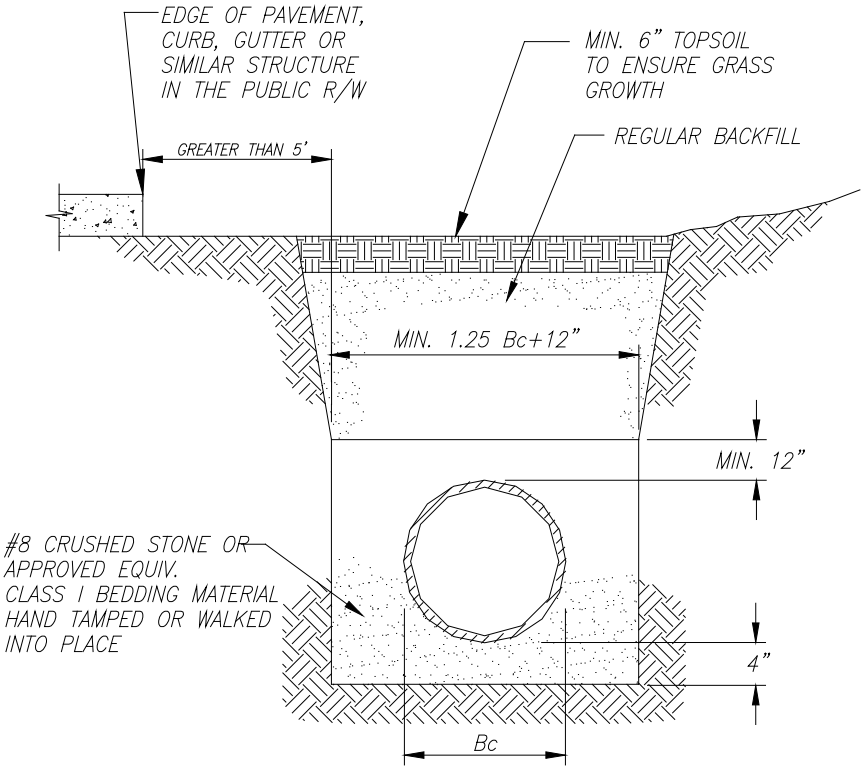

WITHIN 5' OF EDGE OF PAVEMENT

NOTE:
ALL BEDDING & INITIAL BACKFILL SHALL BE INSTALLED IN 6" TO 12" BALANCED LIFTS

A MINIMUM 9" CLEARANCE SHALL BE PROVIDED ON EACH SIDE OF THE INSTALLED PIPE

LEGEND

Bc = OUTSIDE DIAMETER
D = INSIDE DIAMETER
d = DEPTH OF BEDDING MATERIAL BELOW PIPE

PLASTIC PIPE (PVC & HDPE) TRENCH DETAIL

GREATER THAN 5' FROM EDGE OF PAVEMENT

NO SCALE

Figure 3-15A

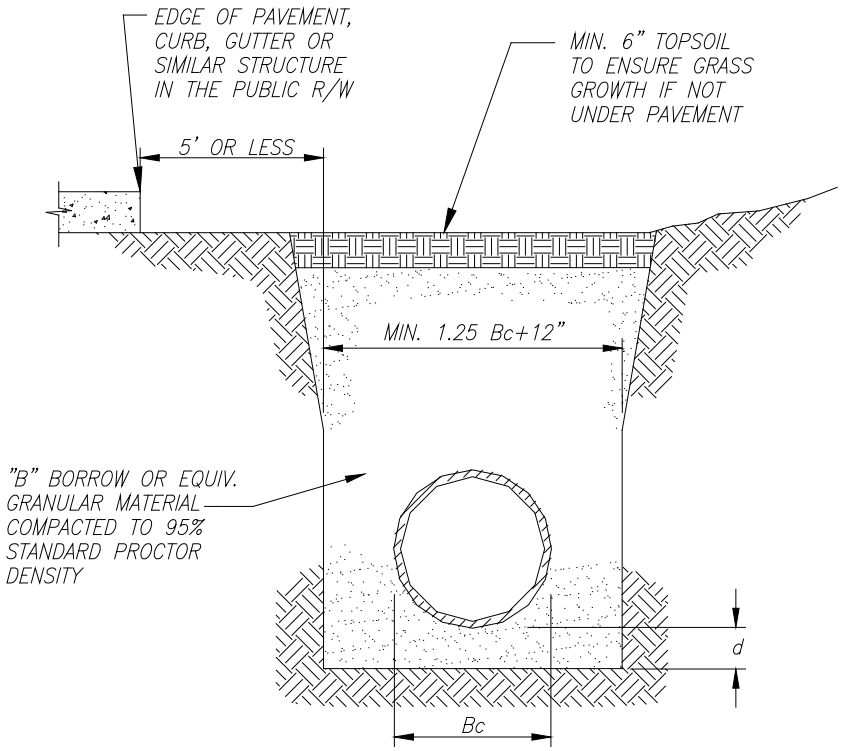

WITHIN 5' OF EDGE OF PAVEMENT

DEPTH OF BEDDING MATERIAL BELOW PIPE

D	(d) MIN.
27" & SMALLER	3"
30" TO 60"	4"
66" & LARGER	6"

NOTE:
ALL BEDDING & INITIAL BACKFILL SHALL BE INSTALLED IN 6" TO 12" BALANCED LIFTS

MIN. 9" OF CLEARANCE SHALL BE PROVIDED ON EACH SIDE OF THE INSTALLED PIPE

LEGEND

Bc = OUTSIDE DIAMETER
D = INSIDE DIAMETER
d = DEPTH OF BEDDING MATERIAL BELOW PIPE

REINFORCED CONCRETE PIPE (RCP) TRENCH DETAIL

WITHIN 5' OF EDGE OF PAVEMENT
NO SCALE

Figure 3-16

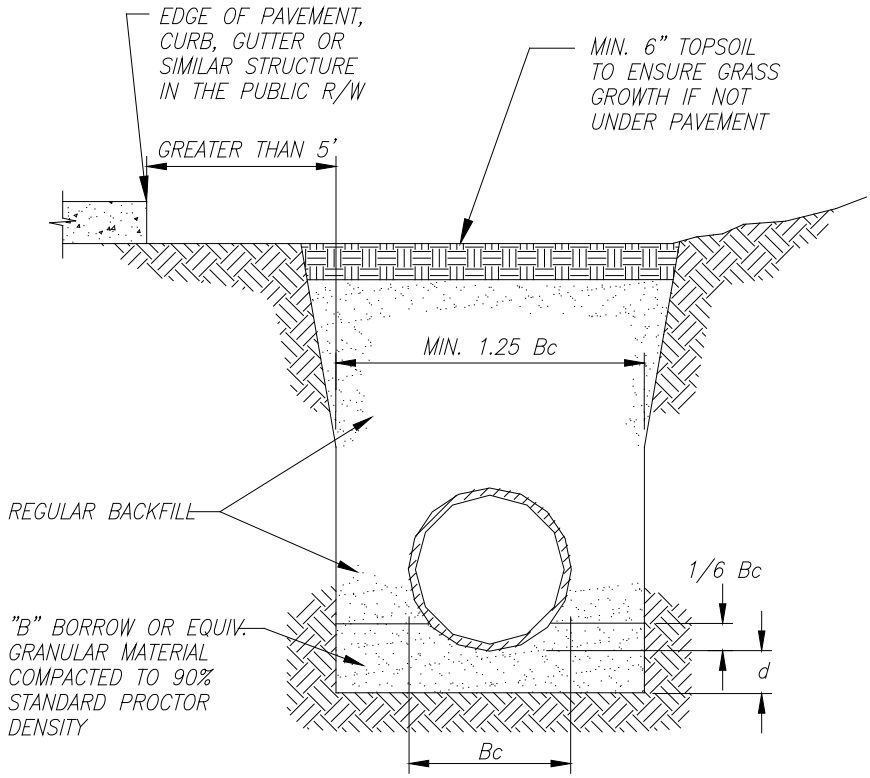

GREATER THAN 5' FROM EDGE OF PAVEMENT

DEPTH OF BEDDING MATERIAL BELOW PIPE

D	(d) MIN.
27" & SMALLER	3"
30" TO 60"	4"
66" & LARGER	6"

NOTE:
ALL BEDDING & INITIAL BACKFILL SHALL BE INSTALLED IN 6" TO 12" BALANCED LIFTS

MIN. 9" OF CLEARANCE SHALL BE PROVIDED ON EACH SIDE OF THE INSTALLED PIPE

LEGEND

Bc = OUTSIDE DIAMETER
D = INSIDE DIAMETER
d = DEPTH OF BEDDING MATERIAL BELOW PIPE

REINFORCED CONCRETE PIPE (RCP) TRENCH DETAIL

GREATER THAN 5' FROM EDGE OF PAVEMENT
NO SCALE

Figure 3-16A

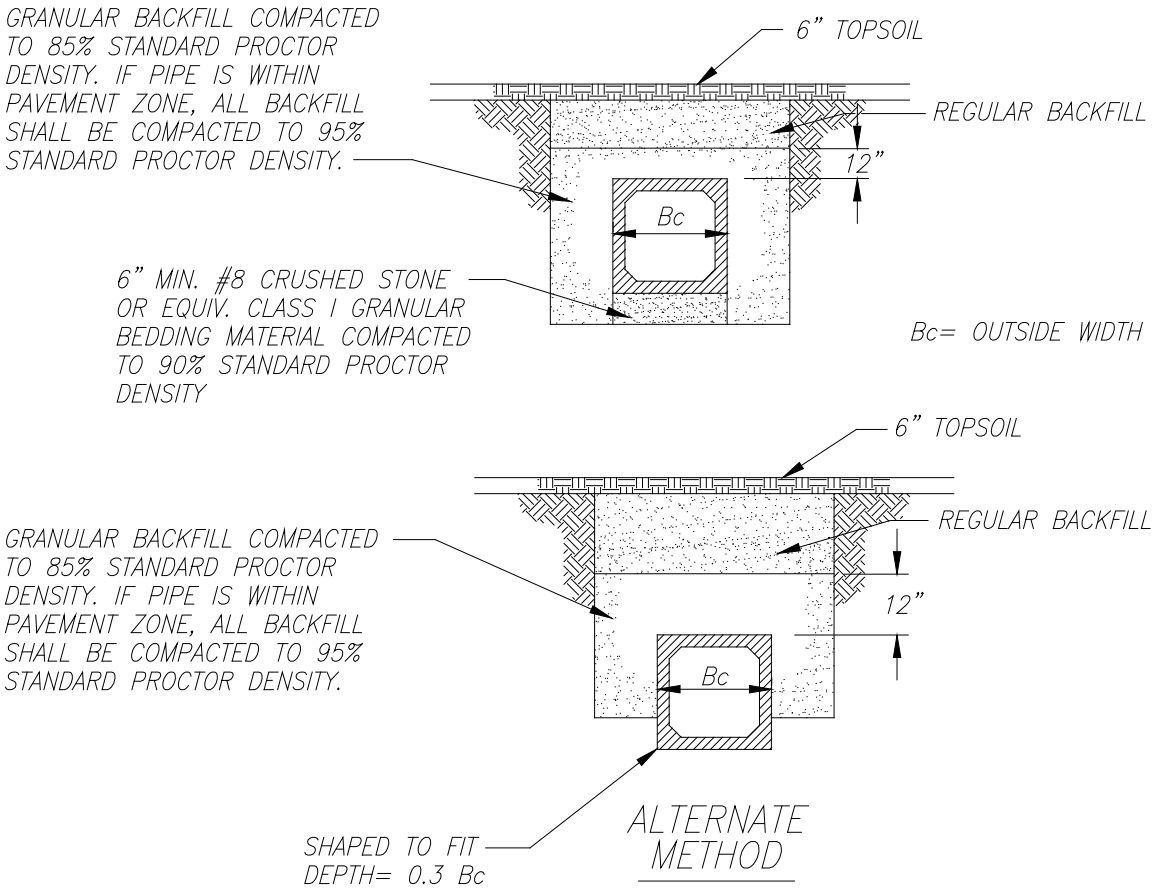

NOTE: REINFORCED CONCRETE BOX SECTIONS IN CONFORMANCE WITH ASTM C789 AND C850.
SOIL BEARING CAPACITY TO BE TESTED FOR CONFORMANCE WITH MINIMUM MANUFACTURER'S RECOMMENDATIONS.

REINFORCED CONCRETE BOX SECTION BEDDING DETAIL

NO SCALE

Figure 3-17

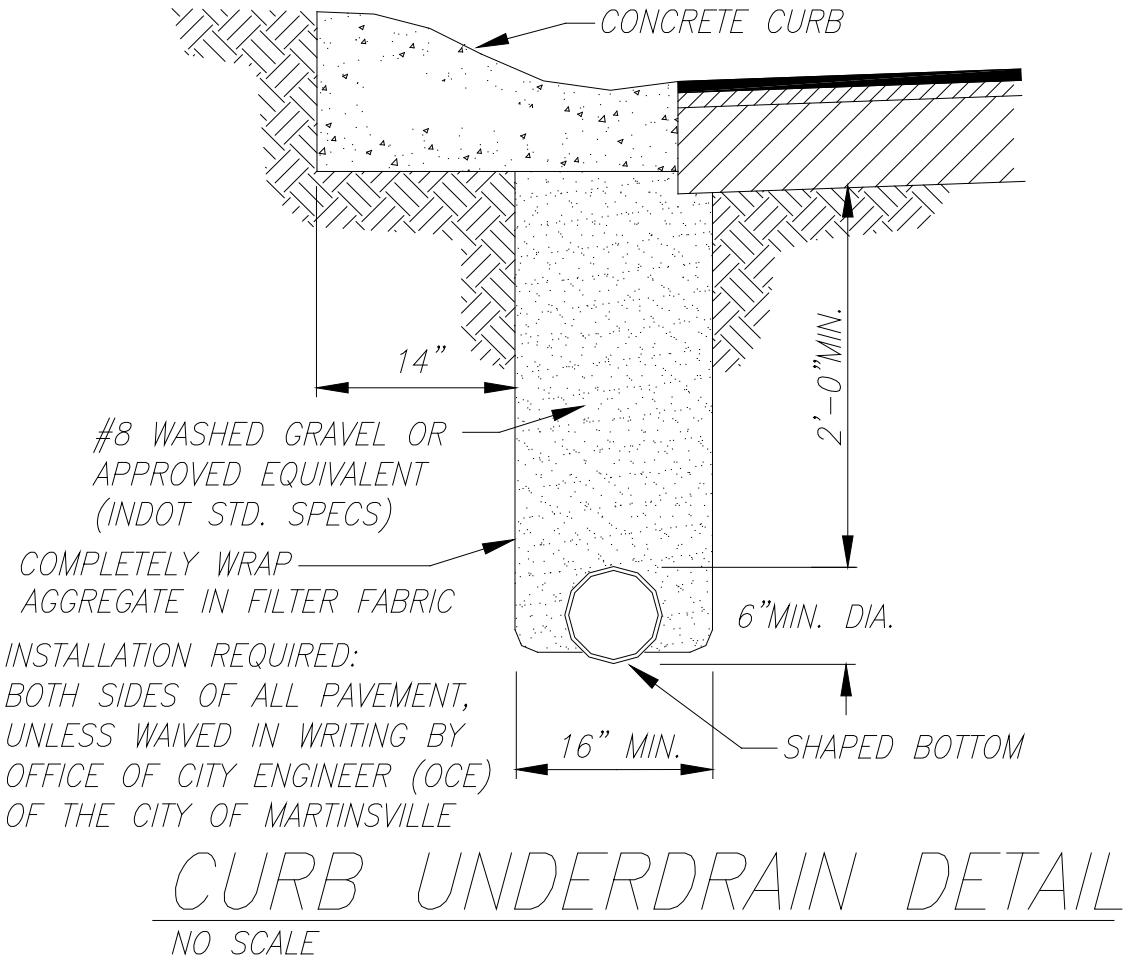

CURB UNDERDRAIN DETAIL

NO SCALE

Figure 3-18

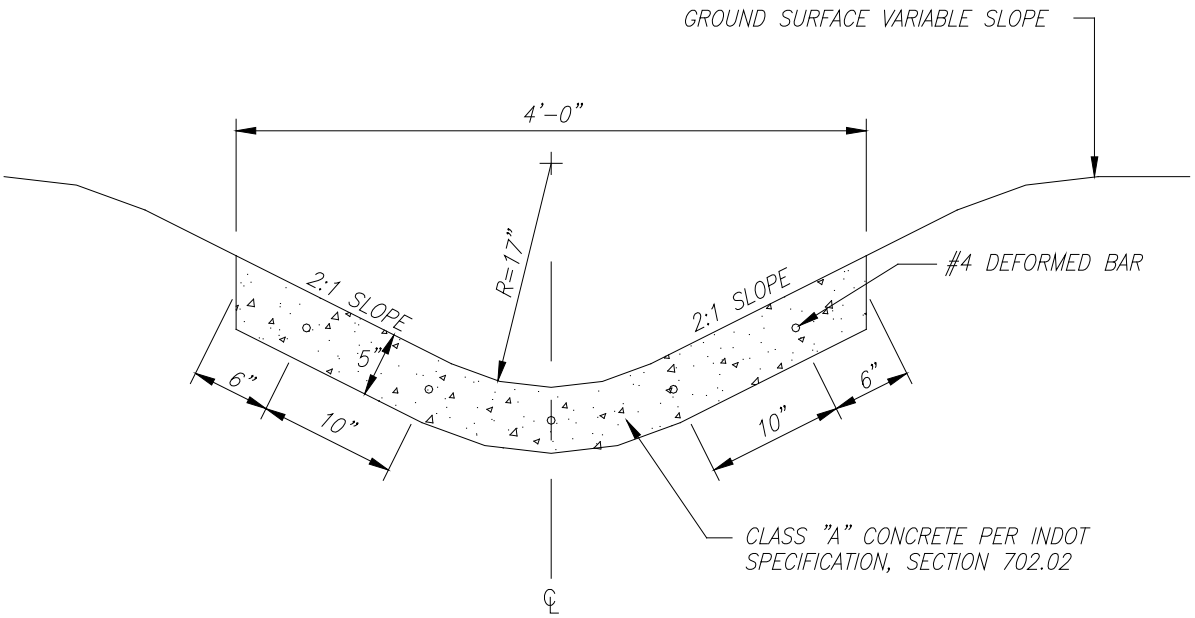

PAVED SIDE DITCH TYPE "B"

NOT TO SCALE

Figure 3-19

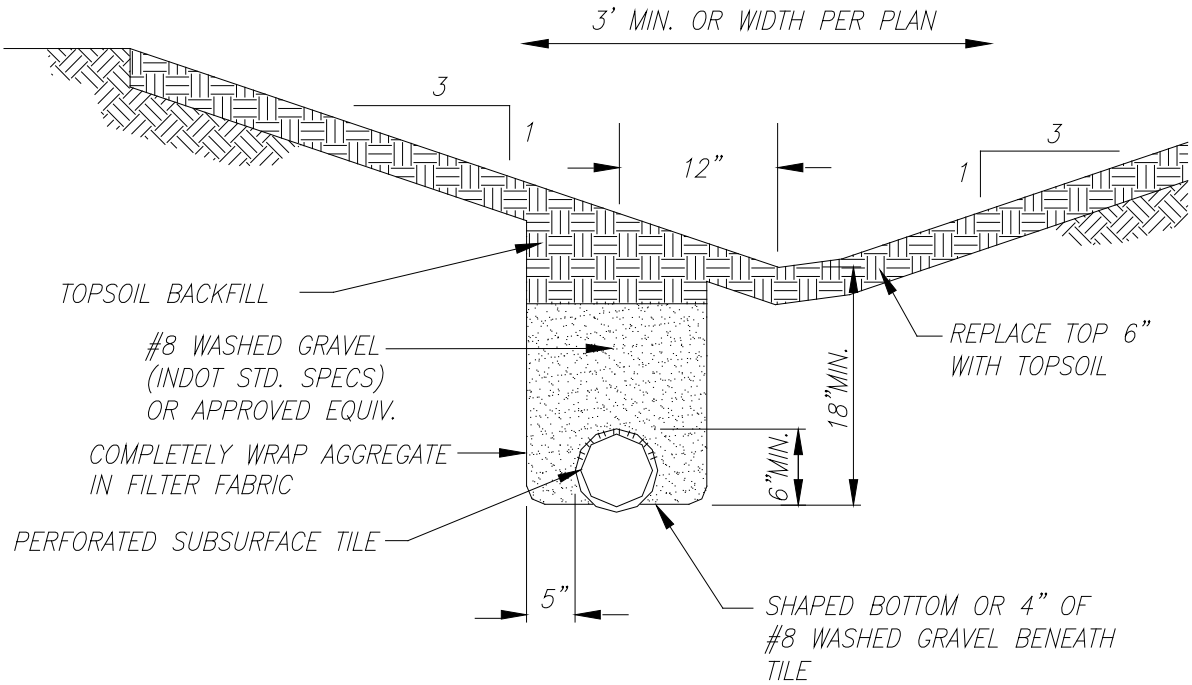

SWALE UNDERDRAIN DETAIL

NO SCALE

Figure 3-20

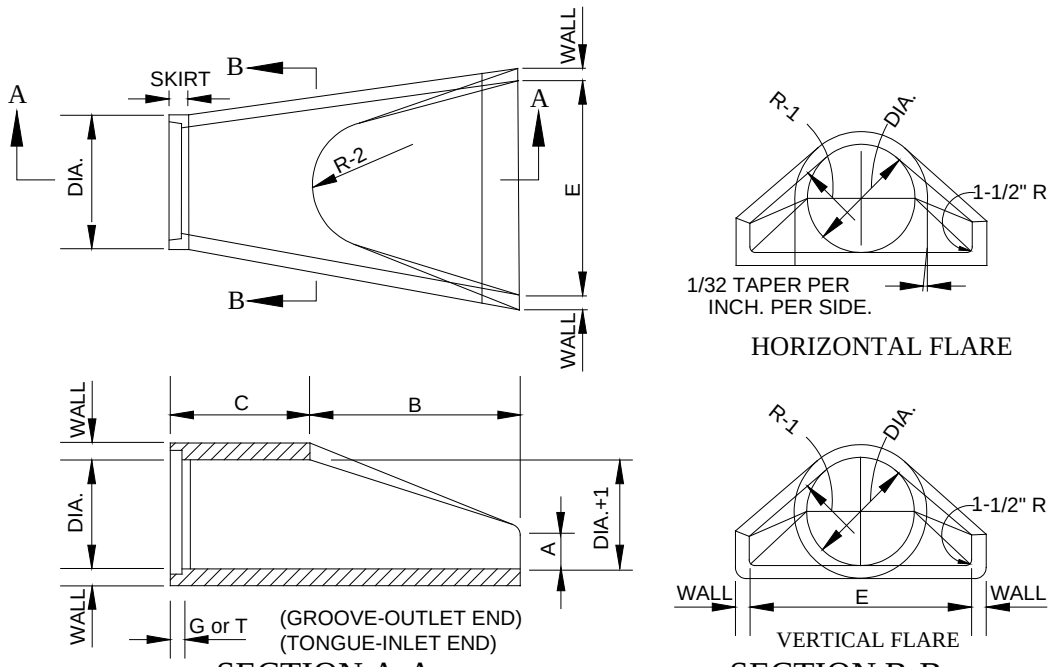

DIA.	WALL	G or T	WT. SEC.	A	B	C	D	E	DIA.+1	R-1	R-2	SKIRT
12	2	1 1/2	530	4	24	48 7/8	72 7/8	24	13	10 1/16	9	3 1/2
15	2 1/4	2	740	6	27	46	73	30	16	12 1/2	11	3 1/2
18	2 1/2	2 1/2	990	9	27	46	73	36	19	15 1/2	12	4
21	2 3/4	2 1/4	1280	9	35	38	73	42	22	16 1/8	13	4
24	3	2 1/2	1520	9 1/2	43 1/2	30	73 1/2	48	25	16 11/16	14	4 1/2
27	3 1/4	2 1/2	1930	10 1/2	48	25 1/2	73 1/2	54	28	17 3/4	14 1/2	4 1/2
30	3 1/2	3	2190	12	54	19 3/4	73 3/4	60	31	18 5/16	15	5
33	3 3/4	3 3/8	3150	13 1/2	58 1/2	39 1/4	97 3/4	66	34	23 3/4	17 1/2	5 1/2
36	4	3 1/2	4100	15	63	34 3/4	97 3/4	72	37	24 1/16	20	5 1/2
42	4 1/2	3 3/4	5380	21	63	35	98	78	43	27 1/4	22	5 1/2
48	5	4 1/4	6550	24	72	26	98	84	49	28 1/8	22	5 3/4
54	5 1/2	4 3/4	8040	27	65	35	100	90	55	32 7/8	24	6 1/4
60	6	5	8750	30	60	39	99	96	61	36 3/4	24	6 3/4
66	6 1/2	5 1/2	10630	24	78	21	99	102	67	35 11/16	24	7 1/4
72	7	6	12520	34	78	21	99	108	73	38 5/8	24	7 3/4
78	7 1/2	6 1/2	14430	24	78	21	99	114	79	41 15/16	24	8 1/2
84	8	7	16350	24	78	21	99	120	85	44 13/16	24	9

NOTE: MANUFACTURE OF END SECTION IS IN ACCORDANCE WWITH APPLICABLE PORTIONS OF A.S.T.M. SPECIFICATION C76.

PRECAST CONCRETE END SECTION

Figure 3-21

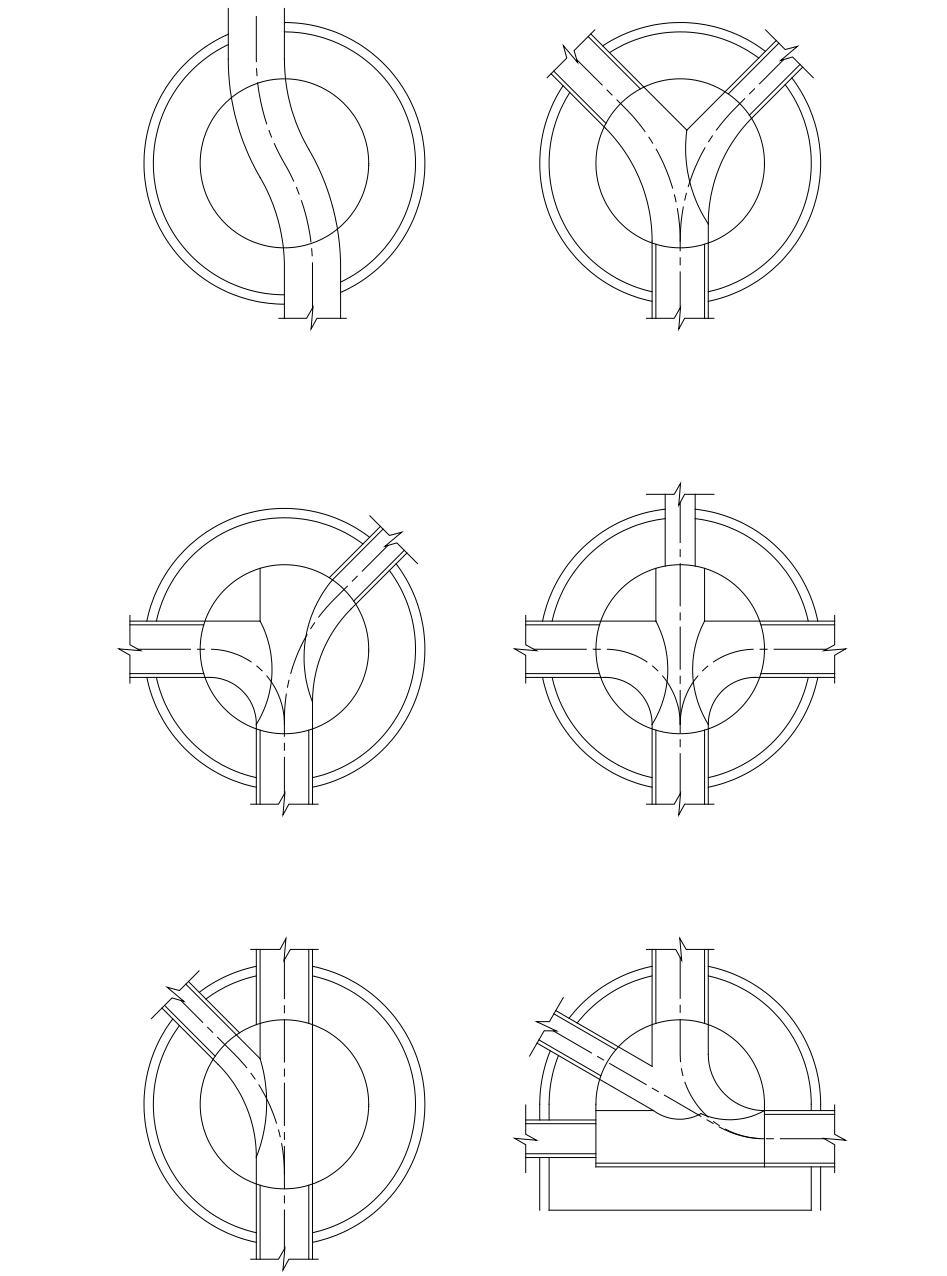

STANDARD MANHOLE BENCHES

NO SCALE

Figure 3-22

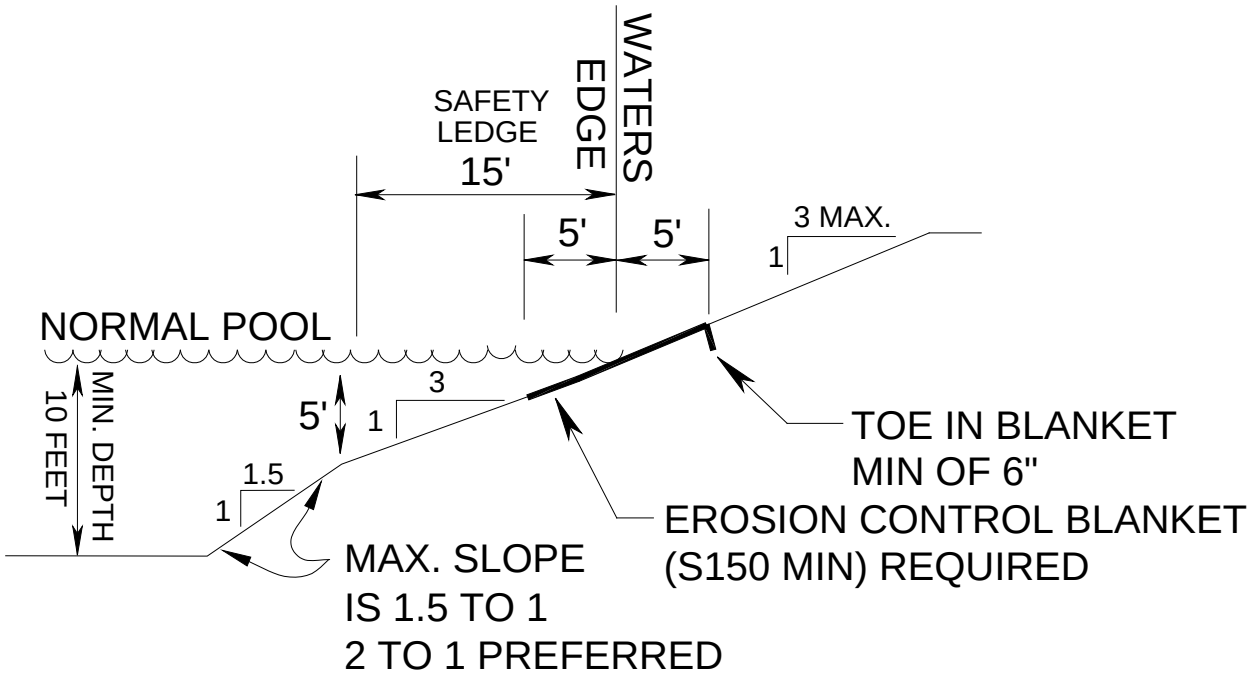

DETENTION BASIN SECTION

(NOT TO SCALE)

Figure 3-23

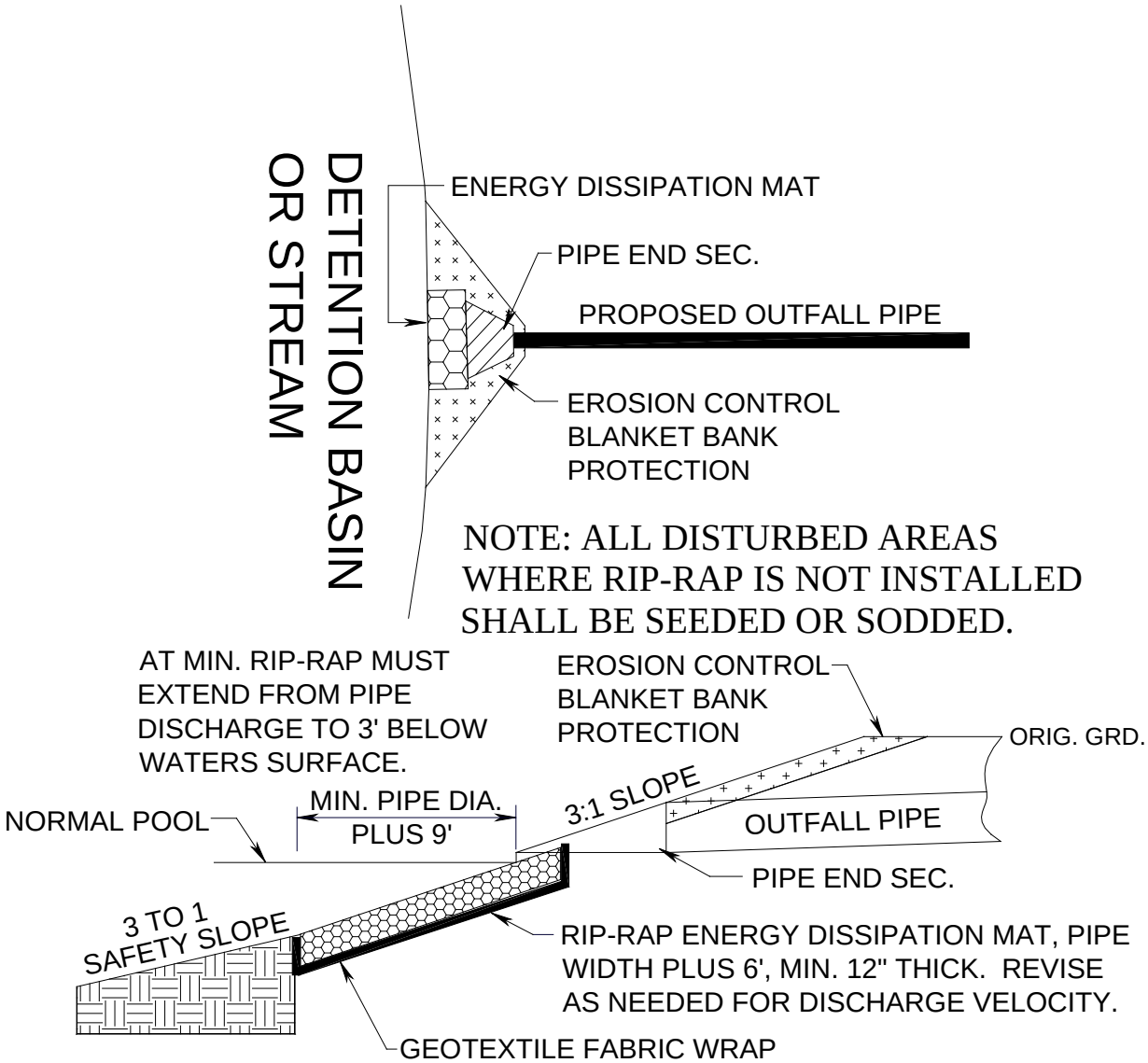

OUTFALL STRUCTURE TYPICAL

(NTS)

Figure 3-24

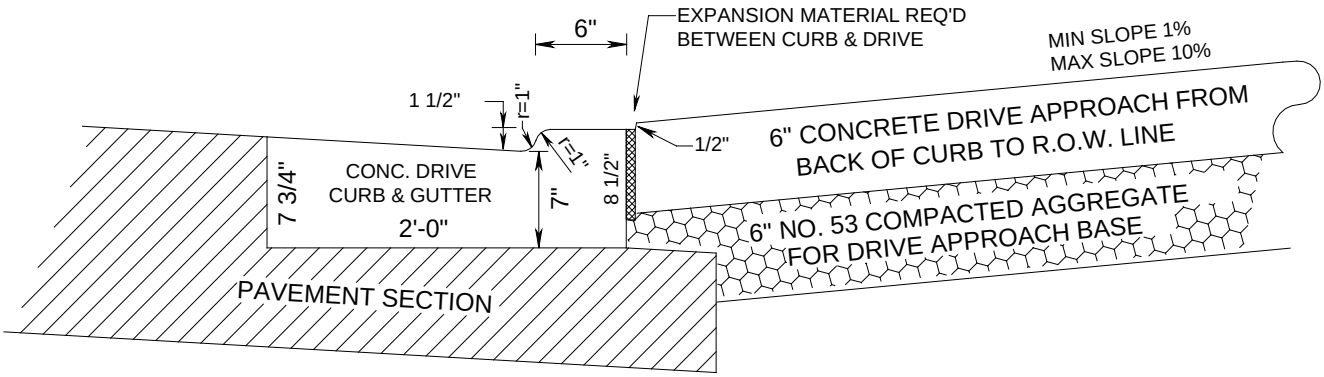

CONCRETE DRIVE APPROACH W/ CURB & GUTTER DETAIL

NTS

THIS TYPICAL TO BE USED FOR ALL STREET APPROACHES WHERE THERE IS CONCRETE CURB & GUTTER OR CONCRETE CURB

ALL DRIVE APPROACHES ON CITY RIGHT-OF-WAY ARE TO BE CONCRETE PER THIS DETAIL

Figure 3-25

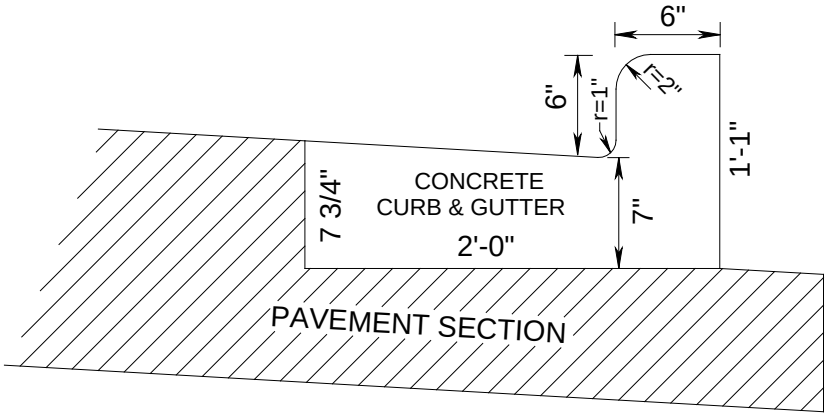

CONC. CURB & GUTTER DETAIL

NTS

Figure 3-26

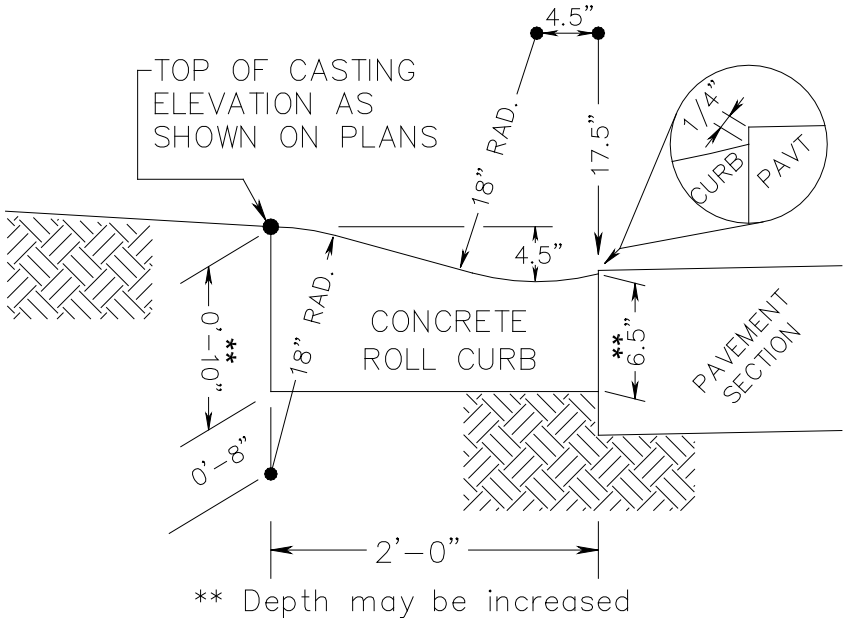

ROLL CURB DETAIL

NTS

Figure 3-27

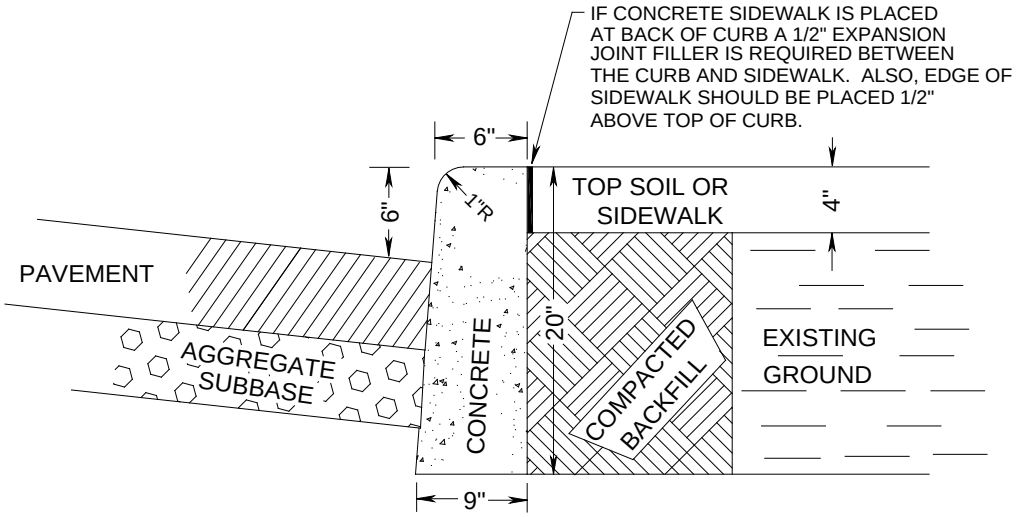

STRAIGHT CONCRETE CURB DETAIL

NTS

Figure 3-28

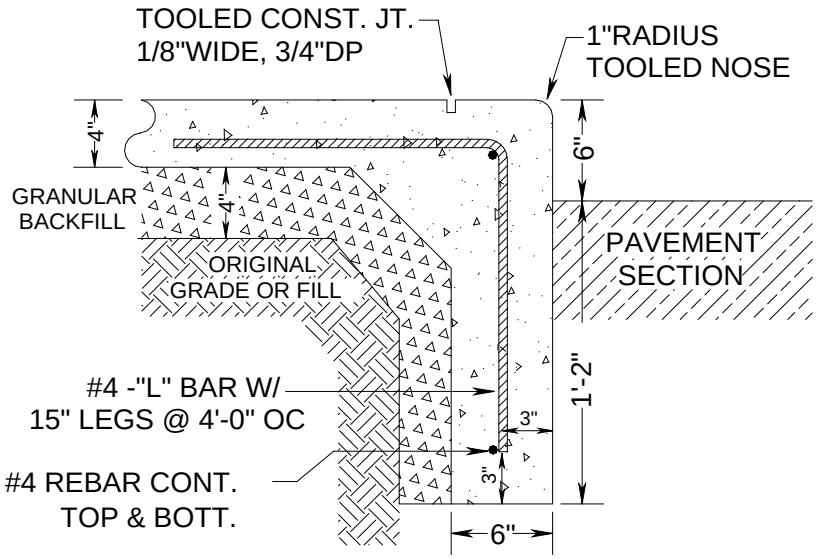

1. CONCRETE TO BE 4000 PSI AIR ENTRAINED.
2. BROOM FINISH
3. APPLY ANTI-SPALLING PENETRATING CURING COMPOUND.

INTEGRAL CURB & SIDEWALK DETAIL (NTS)

Figure 3-29

APPROVED STORMWATER CASTINGS

ALL CASTING NUMBERS ARE NEENAH FOUNDRY COMPANY, HOWEVER OTHER MANUFACTURES CASTINGS MAY BE APPROVED IF THEY ARE EQUIVALENT OR SIMILAR IN SIZE, SHAPE, FLOW, AND STRENGTH CHARACTERISTICS TO THE NEENAH CASTINGS.

ROAD AND STREET CASTINGS

CHAIR BACK CURB: **R-3286-8V; R-3287-10V; R-3287-15**

ROLL CURB & GUTTER: **R-3501-RA; R-3501-TR or TL**

CONCRETE GUTTER: **R-3541 or R-3408**

DITCH AND SWALE CASTINGS

R-4215-C or R-4342

PARKING LOT CASTINGS

R-3433, R-3437 or R-3438

STORM MANHOLE

R-1556 or R-1720-A
SEE FIGURE 4-04